aiwa SERVICE

HV-FX7700 Z
HV-BA75 Z
HV-GX935 Z

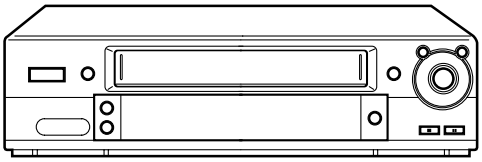

HV-FX7700, BA75

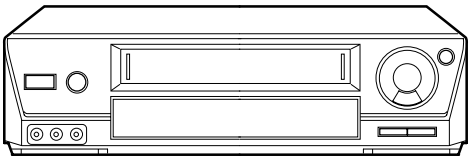

HV-GX935

SERVICE MANUAL

STEREO VIDEO CASSETTE RECORDER <7700/75>
VIDEO CASSETTE RECORDER<935>

BASIC VIDEO MECHANISM
: D33K-4HF/PAL(6721R-0250A)<7700/75>
: D33K-4HD/NP-VCR(6721R-0205A)<935>

This Service Manual is the "Revision Publishing" and replaces "Simple Manual" (S/M Code No. 09-007-347-2T3).

aiwa

S/M Code No. 09-007-347-2R3

REVISION

DATA

Downloaded from www.Manualslib.com manuals search engine

TABLE OF CONTENTS

SPECIFICATIONS 3
ACCESSORIES LIST 3
DISASSEMBLY INSTRUCTIONS 4
SERVICE POSITION 5
VCR TEST TAPE INTERCHANGEABILITY TABLE 6
ELECTRICAL MAIN PARTS LIST ..... 7 ~ 9
TRANSISTOR ILLUSTRATION 9
WIRE HARNESS DIAGRAM 10
BLOCK DIAGRAM ..... 11 ~ 22
SCHEMATIC DIAGRAM
1. POWER/TUNER/NICAM <7700/BA75> ..... 23 ~ 24
2. POWER/TUNER <935> ..... 25 ~ 26
3. AUDIO/VIDEO SECTION ..... 29 ~ 30
4. Hi-Fi AUDIO/SCART <7700/BA75> ..... 31 ~ 32
5. SCART<935> ..... 33 ~ 34
6. SYSTEM CONTROL/SERVO <7700/BA75> ..... 35 ~ 36
7. SYSTEM CONTROL/SERVO <935> ..... 39 ~ 40
8. KEY1 <7700/BA75> 47
9. KEY2 <7700/BA75> 47
10. KEY1 <935> 49
11. KEY2 <935> 49
WAVEFORM
AUDIO/VIDEO SECTION 28
SYSTEM CONTROL/SERVO SECTION 38
VOLTAGE CHART
1. POWER SECTION 25
2. AUDIO/VIDEO SECTION 27
3. Hi-Fi AUDIO/SCART SECTION 33
4. SYSTEM CONTROL/SERVO SECTION 37
FL DISPLAY ..... 41 ~ 42
WIRING
1. MAIN C.B <7700/BA75> ..... 43 ~ 44
2. MAIN C.B <935> ..... 45 ~ 46
3. KEY1 C.B <7700/BA75> 48
4. KEY2 C.B <7700/BA75> 48
5. KEY1 C.B <935> 50
6. KEY2 C.B <935> 50
7. NICAM C.B 51
ADJUSTMENT ..... 52 ~ 53
IC DESCRIPTION ..... 54 ~ 57
MECHANICAL EXPLODED VIEW 1/1 58
MECHANICAL MAIN PARTS LIST 1/1 59
MECHANISM EXPLODED VIEW 1/3~3/3 ..... 60 ~ 64
MECHANISM MAIN PARTS LIST 1/3~3/3 ..... 61 ~ 65
DECK MECHANISM PARTS LOCATIONS
Top View 66
Bottom View 66
DECK MECHANISM DISASSEMBLY
1. Drum Assembly 67
2. Plate Assembly Top 69
3. Holder Assembly CST 69
4. Guide CST 69
5. Bracket Side (L)/Bracket Assembly Door 69
6. Arm Assembly F/L 69
7. Lever Assembly S/W 69
8. Arm Assembly Cleaner 70
9. Head F/E 70
10. Base Assembly A/C Head 70
11. Brake Assembly S 71
12. Brake Assembly T 71
13. Arm Assembly Tension 71
14. Reel S & Reel T 71
15. Support CST 72
16. Base Assembly P4 72
17. Opener Lid 72
18. Arm Assembly T/up 72
19. Arm Assembly Pinch 72
20. Belt Capstan/Motor Capstan 73
21.Clutch Assembly D33-K 73
22. Lever F/R 73
23. Gear Assembly H-Up/D-K or
Gear Assembly Up/D-K 73
24. Bracket Assembly Jog 74
25. Guide Rack F/L, Gear Rack F/L 74
26. Brake Assembly Capstan 74
27. Gear Drive/Gear Cam/Gear Connector 75
28. Bracket Assembly L/D motor 75
29. Gear Sector 76
30. Base Tension/Plate Slider/Lever Tension 76
31. Gear Assembly P3/Gear Assembly P2 77
32. Base Assembly P3/Base Assembly P2 77
33. Arm Assembly Idler or Arm assembly Idler Jog 77
DECK MECHANISM ADJUSTMENT
Tools and Fixtures for service 78
1. Mechanism Alignment Position Check 79
2. Preparation for Adjustment 80
3. Checking Torque 80
4. Guide Roller Height Adjustment 81
4-1. Preliminary Adjustment 81
4-2. Precise Adjustment 81
5. Audio/Control (A/C) Head Adjustment 82
5-1. Preliminary Adjustment 82
5-2. Confirm that the Tape Path smoothly between
the Take-up Guide and Pinch Roller 83
5-3. Precise Adjustment (Azimuth Adjustment) 83
6. X-Value Adjustment 83
7. Adjustment after Replacing Drum Assembly
(Video Heads) 84
8. Check the Tape Travel after Reassembling
Deck Assembly 84
8-1. Checking Audio and RF Locking Time
during Playback and after CUE or REV 84
8-2. Check for Tape Curling or Jamming 84
MAINTENANCE/INSPECTION PROCEDURE
1. Check before starting Repairs 85
2. Required Maintenance 86
3. Scheduled Maintenance 86
4. Supplies Required for Inspection and Maintenance .. 86
5. Maintenance Procedure 86
5-1. Cleaning 86
5-2. Greasing 87
MECHANISM TROUBLESHOOTING GUIDE
1. Deck Mechanism ..... 88 ~ 90
2. Front Loading Mechanism ..... 91 ~ 92

Downloaded from www.Manualslib.com manuals search engine

SPECIFICATIONS

<HV-FX7700, BA75>

Video recording system	Rotary 2 head helical scanning system
Video head	Double azimuth 4 heads
Tuner system	Frequency synthesized tuner
TV system	B/G
Video signal system	PAL color signal, 625 lines, 50 fields
Usable cssettes	VHS video cassettes
Recording/playback time	PAL/MESECAM SP: 5 hours max. with E-300 tape. LP: 10 hours max. with E-300 tape NTSC (Playback only) SP: 3 hours 30 minutes max. with T-210 tape LP: 7 hours max. with T-210 tape EP: 10 hours 30 minutes max. with T-210 tape
Tape speed	PAL/MESECAM SP: 23.39 mm/s LP: 11.69 mm/s] NTSC (Playback only) SP: 33.35 mm/s LP: 16.67 mm/s EP: 11.12 mm/s
Rewind time:	Approx. 3 min. with E-180 tspe
Channel coverage	VHF: C02 to C12 UHF: C21 to C71 CATV: S01 to S41
Video input	0.5 - 2.0 Vp-p, 75 ohm, unbalanced
Video output	1.0 Vp-p, 75 ohm, unbalanced
Horizontal resolution	240 lines (SP)
Video S/N	43 dB (SP)
Audio track	3 tracks (Hi-Fi sound 2 tracks, Normal sound 1 track)
Audio input	SCART: -6 dBm, more than 10 k ohm
Audio output	SCART: -6 dBm, less than 1 k ohm
Hi-Fi frequency response	20 Hz - 20 kHz
Hi-Fi dynamic range	More than 87 dB (SP)
Hi-Fi wow & flutter	Less than 0.01% (nominal)
Operating temperature:	5 °C to 35 °C
Power requirements	200 - 240 V AC, 50 Hz
Power consumption	19 watts TYPE 2.1 watts (power save mode.)
Dimensions	360 (W) x 270 (D) x 94.5 (H) mm ($14^1/_4$ x $10^3/_4$ x $3^3/_4$ in.)
Weight	Approx. 3.5 kg (7.7 lbs.)

<HV-GX935>

Video recording system	Rotary 2 head helical scanning system
Video head	2 heads
Tuner system	Frequency synthesized tuner
TV system	B/G
Video signal system	PAL color signal, 625 lines, 50 fields
Usable cssettes	VHS video cassettes
Recording/playback time	PAL/MESECAM 5 hours max. with E-300 tape. NTSC (Playback only) 3 hours 30 minutes max. with T-210 tape
Tape speed	PAL/MESECAM 23.39 mm/s NTSC (Playback only) 33.35 mm/s
Rewind time:	Approx. 3 min. with E-180 tspe
Channel coverage	VHF: C02 to C12 UHF: C21 to C71 CATV: S01 to S41
Video input	0.5 - 2.0 Vp-p, 75 ohm, unbalanced
Video output	1.0 Vp-p, 75 ohm, unbalanced
Horizontal resolution	240 lines
Video S/N	43 dB
Audio track	1 track (Normal sound)
Audio input	SCART: -6 dBm, more than 10 k ohm
Audio output	SCART: -6 dBm, less than 1 k ohm
Operating temperature:	5 °C to 35 °C
Power requirements	200 - 240 V AC, 50 Hz
Power consumption	16 watts TYPE 2.1 watts (power save mode.)
Dimensions	360 (W) x 270 (D) x 94.5 (H) mm ($14^1/_4$ x $10^3/_4$ x $3^3/_4$ in.)
Weight	Approx. 3.5 kg (7.7 lbs.)

• Design and specifications are subject to change without notice.

ACCESSORIES LIST

DESCRIPTIONで判断できない物は "REFERENCE NAME LIST" を参照してください。
If can't understand for Description please kindly refer to "REFERENCE NAME LIST".

REF. NO	PART NO.	KANRI NO.	DESCRIPTION
1	S8-35R-P00-55J		INSTRUCTION ASSY ABFA918P 3GA1<75>
1	S8-35R-P00-54J		INSTRUCTION ASSY CBFA918P NGA2<77>
1	S8-35R-P00-54L		INSTRUCTION ASSY CBFA203P NSA4<93>
2	S7-11R-1P0-24C		REMOTE CONTROLLER ASSY<75,77>
2	S7-11R-1P0-24D		REMOTE CONTROLLER ASSY(BFA203P<93>
3	S8-610-33B-000		CABLE SET ASSY<75,77>
3	S8-615-05B-000		CABLE SET ASSY<93>
4	S8-615-05R-000		CABLE ASSY<75,77>
5	S5-640-18B-000		PLUG ASSY PHONO CORD<75,77>

TYPE	MODEL NAME	SUFFIX
<77>	HV-FX7700	Z
<75>	HV-BA75	Z
<93>	HV-GX935	Z

Downloaded from www.Manualslib.com manuals search engine

DISASSEMBLY INSTRUCTIONS

1. Top Case Removal

1) Remove 4 screws holding the top case.

2. Panel Front Removal (see Fig. 1)

1) Release 7 tabs, and then remove the panel front.

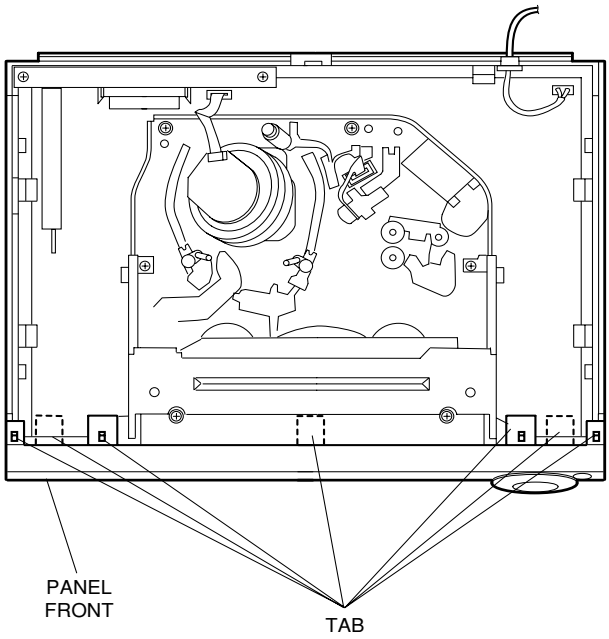

Fig. 1

3. Key1 C.B. and Key2 C.B. Removal (see Fig. 2)

1) Release 2 tabs, and then remove Key2 C.B. from the connector (PKM02) in the direction of arrow ①.
2) Release the tab, and then remove Key1 C.B. from the connector (PKM01) in the direction of arrow ②.

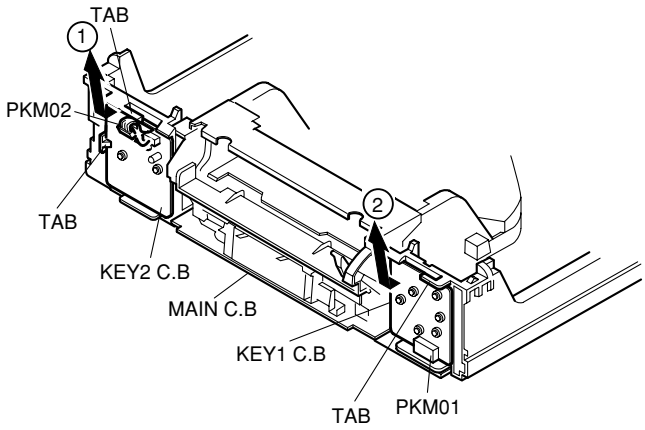

Fig. 2

4. Mechanism Removal (see Fig. 3)

1) Disconnect the drum FF cable from the connector (PMD01) on the Main C.B.
2) Disconnect the ACE head FF cable from the connector (P3D02) on the Main C.B.
3) Remove 6 screws Ⓐ.

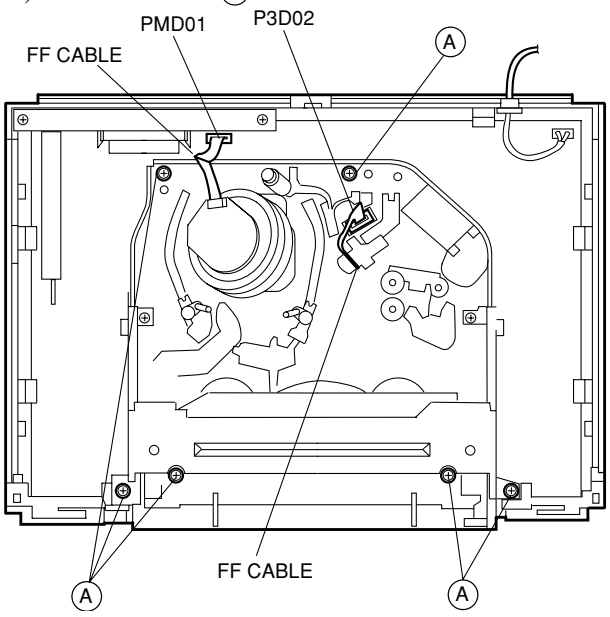

Fig. 3

5. Main C.B. Removal (see Fig. 4)

1) Remove 2 screws Ⓑ holding the panel assy, distri-butor.
2) Release 5 tabs, and then simultaneously lift the panel assembly, distributor and Main C.B. to remove them.

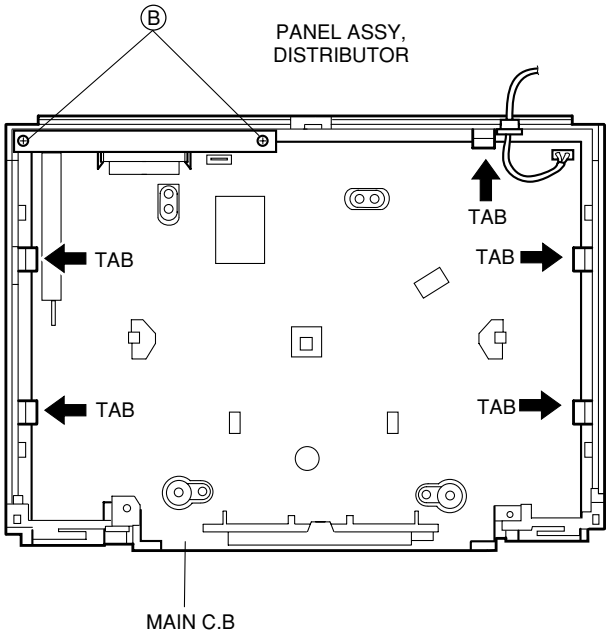

Fig. 4

Downloaded from www.Manualslib.com manuals search engine

SERVICE POSITION

To set the mechanism to the service position in active status:

Insert a spacer as shown below: The service position can be set in the stable status without any defective contact.

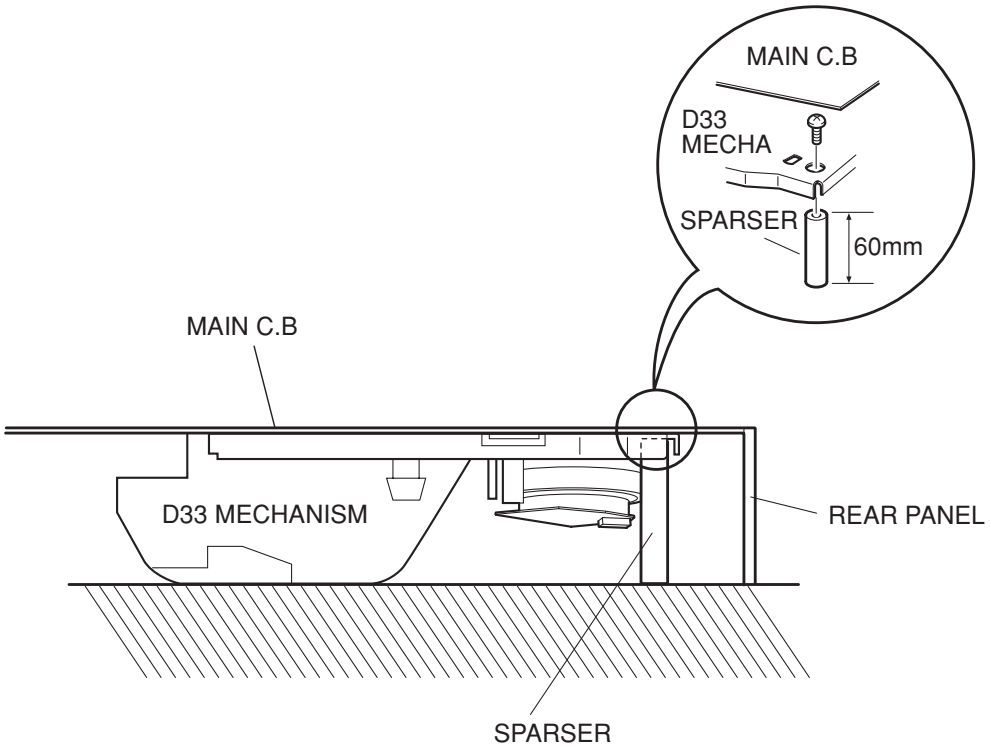

Location

Install spacers at locations (A) and (B).

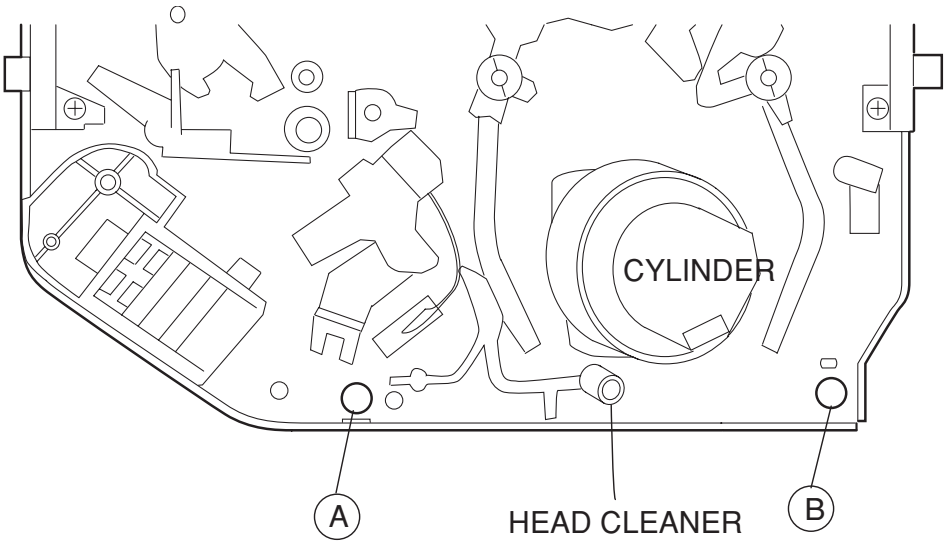

Top View

Downloaded from www.Manualslib.com manuals search engine

VCR TEST TAPE INTERCHANGEABILITY TABLE

There are two types of the new allgnment tape CH-1B (for NTSC) and CH-2 (for PAL). On each tape four signals (1)-(4) are recorded for the times and in the order shown below.

(1) : 8min. → (2) : 2min. → (3) : 5min. → (4) : 5min.

The TTV-MP1 (for M-PAL), TTV-MS1 (for MESECAM) and TTV-S1 (for SECAM) allgnment tapes have the same contents as the previous tapes.

Method	Now in use TYPE		New TYPE		Application
	Model	Contents *1	Model	Contents *1	
NTSC	TTV-N1	NTSC, Color bar, 1 kHz, SP	CH-1B(2)	NTSC, Stairsteps, 1 kHz, SP	PB-Y Level/General electrical ADJ. Head ACE Height/Tilt ADJ.
	TTV-NS1	NTSC, Color bar, 1 kHz, SP	No Changed.		For S-VHS (SQPB) check
	TTV-N1E	NTSC, Color bar, 1 kHz, EP	CH-1B(4) *2	NTSC, Color bar, 1 kHz, EP	Switching position ADJ.
	TTV-NS6E	NTSC, Color bar, No sound, EP	No Changed.		For S-VHS (SQPB) check
	TTV-N2	NTSC, Stairsteps, 7 kHz, SP	CH-1B(1)	NTSC, Stairsteps, 7 kHz, SP	Head ACE Azimuth ADJ.
	TTV-N12 (SCV-1998)	NTSC, Color bar, 1 kHz, SP	CH-1B(4)	NTSC, Color bar, 1 kHz, EP	FM Envelope ADJ. X-Value ADJ.
	TTV-N6 (TTV-N06T)	NTSC, Mono scope, 7 kHz, SP	No Changed.		For total picture quality check (resolution, etc)
	TTV-N7A	NTSC, Stairsteps, 1 kHz, SP, HiFi 400 Hz	CH-1B(3)	NTSC, Color bar, No sound SP, HiFi 400 Hz	HiFi Audio PB Level ADJ.
PAL	TTV-P1	PAL, Color bar, 1 kHz, SP	CH-2 (2) * 3	PAL, Stairsteps, 1 kHz, SP	Switching position ADJ. PB-Y Level/General electrical ADJ. Head ACE Height/Tilt ADJ.
	TTV-P1L	PAL, Color bar, 1 kHz, LP	CH-2 (4)	PAL, Color bar, 1 kHz, LP	Switching position. (LP Model) FM Envelope ADJ. (LP Model) X-Value ADJ. (LP Model)
	TTV-P2	PAL, Stairsteps, 6 kHz, SP	CH-2 (1)	PAL, Stairsteps, 6 kHz, SP	HEAD ACE Azimuth ADJ. FM Envelope ADJ. (SP Model) X-Value ADJ. (SP Model)
	TTV-P6 (TTV-N06T)	PAL, Monoscope, 6 kHz, SP	No Changed.		For total picture quality check (resolution, etc)
	TTV-P7	PAL, Stairsteps, 1 kHz, SP, HiFi 1 kHz	CH-2 (3)	PAL, Color bar, No sound SP, HiFi400 Hz	HiFi Audio PB Level ADJ.
	TTV-P16	PAL, Color bar, 400 Hz, SP, HiFi 1 kHz	No Changed.		FM Filter ADJ.

* 1. Described in the order of color format. video signal. linear audio. tape speed and Hi-Fi audio.
* 2. Use CH-1B (1)-(3) with models used exclusively in the SP mode.
* 3. Use CH-2 (3) and (4) when it is necessary to observe the chroma signal.

Downloaded from www.Manualslib.com manuals search engine

ELECTRICAL MAIN PARTS LIST

DESCRIPTIONで判断できない物は "REFERENCE NAME LIST" を参照してください。
If can't understand for Description please kindly refer to "REFERENCE NAME LIST".

REF. NO	PART NO.	KANRI NO.	DESCRIPTION
IC			
⚠	S2-309-024-040		SENSORLTV-817B PHOTO COU
	SI-SS4-310-00A		IC,KA431AZ
⚠	SA-400-811-220		KA7552
	SI-SA7-159-80A		IC,LA71598M
	SI-HI6-432-19A		IC,HD6432197XA04F
	SI-SS3-082-00A		IC,KA3082
	SI-AL2-416-00B		IC,AT24C16-10PC
	SI-KE7-031-00A		IC,KIA7031P
	87-001-196-010		IC,KIA7042P
	SI-NE1-631-10A		IC,UPD16311GC-AB6
	SI-IT3-407-00B		IC,MSP3407D-QG<75,77>
	SI-SA7-479-30A		IC,LC74793<75,77>
	SI-PH9-605-00A		IC,TDA9605H<75,77>
	SI-MT1-443-00A		IC,MM1443XJ<75,77>
TRANSISTOR			
	ST-R12-730-9AA		TR,KTA1273-TP-Y
	ST-R32-050-9AB		TR,KTC3205-TP-Y
	ST-R12-680-9BA		TR,KTA1268-BL
	S7-A30-293-010		TR,KTC2804-Y
	S3-1KR-A10-3M0		TR,KRA103M-TP
	ST-R10-030-9AA		TR,KSR1003
	ST-R31-990-9AF		TR,KTC3199-BL
	SK-RC1-01M-000		TR,KRC101M
	ST-R12-670-9AC		TR,KTA1267-GR
	ST-R53-430-9BA		TR,2SC5343-L
	ST-R19-800-9CA		TR,2SA1980G
	ST-R53-440-9AA		TR,2SC5344Y
	ST-R10-300-9AE		TR,KRC103M
	ST-R12-010-9AC		TR,SRC1201 4.7K,
⚠	ST-F38-002-0AA		TR,SSSS3N80A
DIODE			
	SD-D01-000-9CA		DIODE,EG01CW
	SD-R18-020-9AA		DIODE,ERA18-02KFRB
	SD-R10-400-9BA		DIODE,RL104F
	SD-R81-004-0BA		DIODE,ERC81-004L22
	SD-R20-200-0AB		DIODE,HER202 BK
	SD-D20-700-0AA		DIODE,2A07
	87-A40-246-080		DIODE,1N4148
	SD-R10-400-9AB		DIODE,RL104
	87-070-173-010		DIODE,S1WBA60
MAIN C.B			
BD141	S6-360-04C-000		COIL,BFS3550R2FD8
⚠C101	S6-240-88K-000		CAP,0.1UF-275VAC
⚠C102	S6-240-88K-000		CAP,0.1UF-275VAC
⚠C103	SC-E47-6CU-611		CAP,E 47UF-400V
⚠C105	87-016-375-010		CAP,0.01UF-630V
⚠C106	S6-240-87B-000		CAP,100P-1KV
⚠C112	87-012-379-010		CAP,3300PF-400V
⚠C113	SA-1B3-0KH-2M0		CAP,220PF-400V
C115	87-010-408-040		CAP,E 47UF-50V
C116	87-010-237-910		CAP,E 1000UF-16V
C117	87-010-375-080		CAP,E 330-10V
C118	SC-E22-73D-638		CAP,E 220-10V
C119	87-010-408-040		CAP,E 47UF-50V
C120	87-010-387-010		CAP,E 470UF-25V KME
C121	87-010-387-080		CAP,E 470UF-25V
C124	87-015-681-080		CAP,E 10-16V
C144	87-010-408-040		CAP,E 47UF-50V
C151	87-015-681-080		CAP,E 10-16V
C153	87-015-681-080		CAP,E 10-16V
C303	87-015-695-080		CAP,E 1.0-50V
C304	87-015-684-080		CAP,E 47-16V
C310	87-015-698-080		CAP,E 4.7-50V
C315	87-015-681-080		CAP,E 10-16V
C316	87-015-681-080		CAP,E 10-16V
C318	87-015-695-080		CAP,E 1.0-50V
C320	87-015-695-080		CAP,E 1.0-50V
C322	87-015-684-080		CAP,E 47-16V
C325	87-015-695-080		CAP,E 1.0-50V
C326	87-015-681-080		CAP,E 10-16V
C327	87-015-681-080		CAP,E 10-16V
C333	87-015-681-080		CAP,E 10-16V
C337	87-015-698-080		CAP,E 4.7-50V
C339	87-015-698-080		CAP,E 4.7-50V
C346	87-015-684-080		CAP,E 47-16V
C348	87-015-695-080		CAP,E 1.0-50V
C354	87-015-684-080		CAP,E 47-16V
C358	87-015-695-080		CAP,E 1.0-50V
C374	87-015-684-080		CAP,E 47-16V
C376	87-015-681-080		CAP,E 10-16V
C377	87-015-681-080		CAP,E 10-16V
C379	87-010-403-040		CAP,E 3.3-50V
C386	87-010-552-040		CAP,E 22-16V
C389	87-015-698-080		CAP,E 4.7-50V
C390	87-010-552-040		CAP,E 22-16V
C392	87-010-408-040		CAP,E 47UF-50V
C500	87-016-040-080		CAP,0.047F-5.5V<93>
C500	87-016-455-080		CAP,E 470UF-6.3V<75,77>
C502	87-015-684-080		CAP,E 47-16V
C503	87-016-088-040		CAP,E 220-6.3V
C504	87-016-088-040		CAP,E 220-6.3V
C505	87-015-684-080		CAP,E 47-16V
C510	87-015-684-080		CAP,E 47-16V
C523	87-010-552-040		CAP,E 22-16V
C524	87-015-684-080		CAP,E 47-16V
C526	87-010-408-040		CAP,E 47UF-50V
C530	87-015-681-080		CAP,E 10-16V
C534	87-015-698-080		CAP,E 4.7-50V
C535	87-015-698-080		CAP,E 4.7-50V
C546	87-010-408-040		CAP,E 47UF-50V
C561	87-016-088-040		CAP,E 220-6.3V
C591	87-016-455-080		CAP,E 470UF-6.3V
C5A5	87-015-695-080		CAP,E 1.0-50V
C5F2	87-010-408-040		CAP,E 47UF-50V
C5F3	SC-E22-73D-638		CAP,E 220-10V
C5P9	87-015-698-080		CAP,E 4.7-50V
C701	87-015-698-080		CAP,E 4.7-50V
C703	87-015-698-080		CAP,E 4.7-50V
C704	87-015-684-080		CAP,E 47-16V
C706	87-016-455-080		CAP,E 470UF-6.3V
C713	87-015-684-080		CAP,E 47-16V
C7M2	87-015-681-080		CAP,E 10-16V
C7V1	87-015-684-080		CAP,E 47-16V<75,77>
C7V6	87-015-698-080		CAP,E 4.7-50V<75,77>
C7V7	SC-N10-50K-948		CAP,1UF-50V<75,77>
C7V8	87-015-695-080		CAP,E 1.0-50V<75,77>
C806	87-015-698-080		CAP,E 4.7-50V<75,77>
C807	87-015-698-080		CAP,E 4.7-50V<75,77>
C810	87-015-681-080		CAP,E 10-16V<75,77>
C811	87-015-681-080		CAP,E 10-16V<75,77>
C813	87-015-681-080		CAP,E 10-16V<75,77>
C814	87-015-681-080		CAP,E 10-16V<75,77>
C815	87-015-681-080		CAP,E 10-16V<75,77>
C816	87-015-681-080		CAP,E 10-16V<75,77>
C817	87-015-681-080		CAP,E 10-16V<75,77>
C818	87-015-698-080		CAP,E 4.7-50V<75,77>
C819	87-015-681-080		CAP,E 10-16V<75,77>
C821	87-015-684-080		CAP,E 47-16V<75,77>
C822	87-015-681-080		CAP,E 10-16V<75,77>
C823	87-015-681-080		CAP,E 10-16V<75,77>
C824	87-015-681-080		CAP,E 10-16V<75,77>
C825	87-015-684-080		CAP,E 47-16V<75,77>
C827	87-015-681-080		CAP,E 10-16V<75,77>

Downloaded from www.Manualslib.com manuals search engine

REF. NO	PART NO.	KANRI NO.	DESCRIPTION
C828	87-015-684-080		CAP,E 47-16V<75,77>
C832	87-015-684-080		CAP,E 47-16V
C835	87-010-400-080		CAP,E 0.47-50V<75,77>
C902	87-016-455-080		CAP,E 470UF-6.3V
C912	87-016-455-080		CAP,E 470UF-6.3V<75,77>
C956	87-015-695-080		CAP,E 1.0-50V
C960	87-015-695-080		CAP,E 1.0-50V
C961	87-015-695-080		CAP,E 1.0-50V<75,77>
C962	87-015-695-080		CAP,E 1.0-50V<75,77>
C963	87-010-552-040		CAP,E 22-16V<75,77>
C964	87-015-695-080		CAP,E 1.0-50V<75,77>
CS501	S6-00R-DB0-04C		SW,MPU10252MLB4 MIC
DIG501	S3-02R-1N0-03B		LEVEL METER 7MT229GK<93>
DIG501	S3-02R-1N0-03A		DH 9MT168GK<75,77>
ES501	S9-31R-001-6A0		SENSOR END
ES502	S9-31R-001-6A0		SENSOR END
⚠F101	S5-850-11T-000		FUSE,1600MA 250V
⚠F102	87-001-196-010		ICP-N10 T104
⚠FH01	S5-860-08B-000		HOLDER,FUSE CLIP
⚠FH02	S5-860-08B-000		HOLDER,FUSE CLIP
FL301	S6-330-32K-000		COIL,OSC BIAS 1CHIP 5V
JK801	S6-12R-C00-2C0		JACK,RCA RCA-208C-06<75,77>
JK901	S6-20R-M00-02B		SOCKET 1F-21P<93>
JK901	S6-20R-M00-02A		SOCKET 2F-21P<75,77>
⚠L102	S6-161-45H-000		FILTER SHT LFS2020V4-04350
L103	S6-330-88G-000		COIL,CHOCK TP 5MM
L104	S6-330-88G-000		COIL,CHOCK TP 5MM
L105	87-003-152-080		INDUCTOR,100M 2.3-3.4-5
L301	87-005-196-080		COIL,10UH
L302	87-003-286-080		COIL,56 2.3-3.4-5
L303	87-003-286-080		COIL,56 2.3-3.4-5<93>
L303	87-003-152-080		INDUCTOR,100M 2.3-3.4-5<75,77>
L305	87-005-196-080		COIL,10UH
L307	87-005-196-080		COIL,10UH
L308	87-005-440-080		COIL,47M 6-6-5
L310	87-005-196-080		COIL,10UH
L503	87-005-196-080		COIL,10UH
L504	87-005-196-080		COIL,10UH
L505	87-005-196-080		COIL,10UH
L506	87-005-686-080		COIL,15UH
L5F1	87-005-196-080		COIL,10UH
L5S1	87-003-148-080		INDUCTOR,33
L702	87-005-196-080		COIL,10UH
L703	87-005-196-080		COIL,10UH
L704	87-003-145-080		INDUCTOR,8.2
L705	87-005-696-080		COIL,100UH
L7V1	87-005-196-080		COIL,10UH<75,77>
L801	87-005-196-080		COIL,10UH
L8R1	87-003-152-080		INDUCTOR,100M 2.3-3.4-5<75,77>
L8R2	87-003-152-080		INDUCTOR,100M 2.3-3.4-5<75,77>
L901	87-003-152-080		INDUCTOR,100M 2.3-3.4-5
L902	87-003-152-080		INDUCTOR,100M 2.3-3.4-5
L904	87-003-152-080		INDUCTOR,100M 2.3-3.4-5
L905	S6-360-04C-000		COIL,BFS3550R2FD8
L906	87-003-152-080		INDUCTOR,100M 2.3-3.4-5
L907	S6-360-04C-000		COIL,BFS3550R2FD8
L911	87-003-152-080		INDUCTOR,100M 2.3-3.4-5<75,77>
L912	87-003-152-080		INDUCTOR,100M 2.3-3.4-5<75,77>
L914	87-003-152-080		INDUCTOR,100M 2.3-3.4-5<75,77>
L916	87-003-152-080		INDUCTOR,100M 2.3-3.4-5<75,77>
LD501	S9-31R-001-7A0		LED
MS501	S6-00R-PY0-01B		SW,MMS00420ZMBO MIC
P3D01	S5-612-34Z-000		CONN,3P<93>
P3D01	S5-612-34W-000		GF120-10S-TS-A LGC 10P MP<75,77>
P3D02	S6-30R-5S0-08E		CONN,6P
P3D03	S5-612-51B-000		GB201-2P-TS-B(LGC) P
P7M01	S5-618-48F-000		CABLE 2P<75,77>
P7M02	S5-618-48F-000		CABLE 2P<75,77>
PMC01	S6-30R-BE0-1H0		CONN,8P
PMD01	S5-612-34V-000		GF120-07S-TS LGC 7P SP
PMK01	S5-618-43D-000		CONN,TUC-P05P 5P
PMK02	S6-724-34B-000		CONN ASSY 5P-150
PML01	S6-30R-2S0-11A		CONN,2P
PW101	S5-612-92B-000		GP390 LGC 3P STRAIG P
R/C5F1	S7-12R-293-8GA		REMOCON RECEIVER
⚠R101	S6-140-07R-000		RES,2.7-2W
R149	87-022-603-080		RES,FIX O 0.47-2W
RS501	S5-00R-AB0-02A		SENSOR GP1S566
RS502	S5-00R-AB0-02A		SENSOR GP1S566
⚠T101	S6-420-23U-000		TRANSFORMER,SMPS SJE-023U
TU701	S7-00R-PL0-1B0		TUNER TADC-G102D<93>
TU701	S7-00R-PG0-1E0		TUNER TCMK0601PD11C<75,77>
W101	87-005-440-080		COIL,47M 6-6-5<75,77>
X301	S2-02R-244-3AE		CRYSTAL,STANDARD H49U
X501	S2-02R-310-01F		X'TAL,10.0000
X502	S5-290-01K-000		X'TAL,32.768KHZ
X503	S2-02R-317-71E		X'TAL,17.734476MHZ
ZD104	SD-Z56-260-9AA		ZENER,GDZJ5.6B 26MM TP
ZD141	SD-Z22-000-9ED		ZENER,MTZ22B
ZD142	87-A40-458-080		ZENER,MTZ18B
ZD151	SD-Z13-260-9AB		ZENER,GDZJ13A 26MM
ZD501	SD-Z68-260-9AB		ZENER,GDZJ6.8C
ZD503	SD-Z68-260-9AB		ZENER,GDZJ6.8C
ZD701	SD-Z33-260-9AA		ZENER,GDZJ33B 26MM TP
ZD801	SD-Z51-000-9AJ		ZENER,GDZJ5.1B TP
ZD802	SD-Z56-260-9AA		ZENER,GDZJ5.6B 26MM TP
ZD803	SD-Z13-260-9AB		ZENER,GDZJ13A 26MM<75,77>
ZD804	SD-Z13-260-9AB		ZENER,GDZJ13A 26MM<75,77>
ZD805	SD-Z51-000-9AJ		ZENER,GDZJ5.1B TP
ZD806	SD-Z51-000-9AJ		ZENER,GDZJ5.1B TP

KEY 1 C.B

PKM01	S5-618-44D-000		CONN,5P
SW905	S5-562-19B-000		SW,SKHV10910B<93>
SW905	S5-562-82C-000		SW,SKQNQED ALPS 5MM<75,77>
SW906	S5-562-19B-000		SW,SKHV10910B<93>
SW906	S5-562-82C-000		SW,SKQNQED ALPS 5MM<75,77>
SW907	S5-562-19B-000		SW,SKHV10910B<93>
SW907	S5-562-82C-000		SW,SKQNQED ALPS 5MM<75,77>
SW908	S5-562-19B-000		SW,SKHV10910B<93>
SW908	S5-562-82C-000		SW,SKQNQED ALPS 5MM<75,77>
SW909	S5-562-19B-000		SW,SKHV10910B<93>
SW909	S5-562-82C-000		SW,SKQNQED ALPS 5MM<75,77>
SW910	S5-562-19B-000		SW,SKHV10910B<93>
SW910	S5-562-82C-000		SW,SKQNQED ALPS 5MM<75,77>
SW911	S5-562-19B-000		SW,SKHV10910B<93>
SW911	S5-562-82C-000		SW,SKQNQED ALPS 5MM<75,77>
SW912	S5-562-19B-000		SW,SKHV10910B<93>

KEY 2 C.B

LD901	SD-L53-110-0AA		LED,SG5311(GRN)<93>
LED902	SD-L53-110-0AA		LED,SG5311(GRN)<75,77>
PKM02	S5-610-36D-000		MA V 8283-0512 WH ELCO
SW901	S5-562-82C-000		SW,SKQNQED ALPS 5MM<75,77>
SW902	S5-562-82C-000		SW,SKQNQED ALPS 5MM<75,77>
SW903	S5-562-19B-000		SW,SKHV10910B<93>
SW903	S5-562-82C-000		SW,SKQNQED ALPS 5MM<75,77>
SW904	S5-562-19B-000		SW,SKHV10910B<93>
SW904	S5-562-82C-000		SW,SKQNQED ALPS 5MM<75,77>

NICAM C.B<75,77>

C751	87-015-684-080		CAP,E 47-16V<75,77>
C757	87-015-684-080		CAP,E 47-16V<75,77>
C758	87-015-681-080		CAP,E 10-16V<75,77>
C759	87-015-681-080		CAP,E 10-16V<75,77>
C762	SC-Q39-21N-409		CAP,0.0039U 100V<75,77>
C763	SC-Q39-21N-409		CAP,0.0039U 100V<75,77>

Downloaded from www.Manualslib.com manuals search engine

REF. NO	PART NO.	KANRI NO.	DESCRIPTION
C766	87-010-403-040		CAP,E 3.3-50V<75,77>
C769	87-015-681-080		CAP,E 10-16V<75,77>
C770	87-015-684-080		CAP,E 47-16V<75,77>
L751	87-005-196-080		COIL,10UH<75,77>
L752	87-005-196-080		COIL,10UH<75,77>
L753	87-005-196-080		COIL,10UH<75,77>
L754	87-003-129-080		INDUCTOR,6800<75,77>
L755	87-003-129-080		INDUCTOR,6800<75,77>
X751	S5-290-219-000		X'TAL 18.432MHZ<75,77>

TYPE	MODEL NAME	SUFFIX
<77>	HV-FX7700	Z
<75>	HV-BA75	Z
<93>	HV-GX935	Z

TRANSISTOR ILLUSTRATION

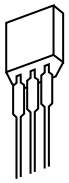

E C B

KRA103M
KRC103M
KTA1267
KTC101M
KTC3199

E C B

2SA1980
2SC5343
2SC5344
KSR1003
KTA1268
SRC1201

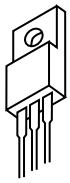

G D S

SSS3N80A

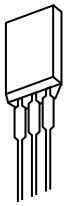

E C B

KTA1273
KTC3205

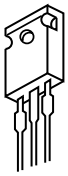

E C B

KTC2804

Downloaded from www.Manualslib.com manuals search engine

WIRE HARNESS DIAGRAM

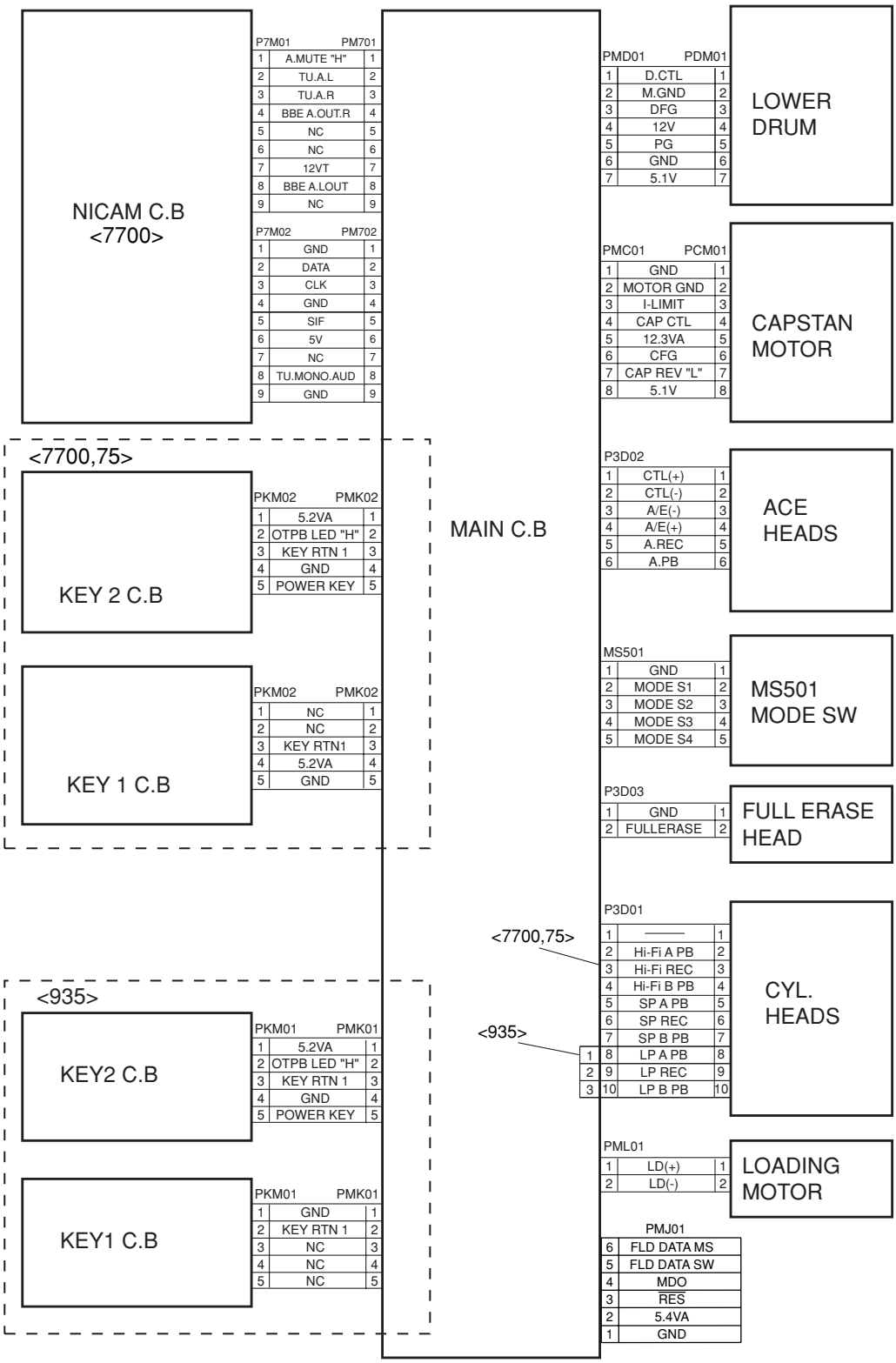

Downloaded from www.Manualslib.com manuals search engine

BLOCK DIAGRAM-1 (POWER SECTION)

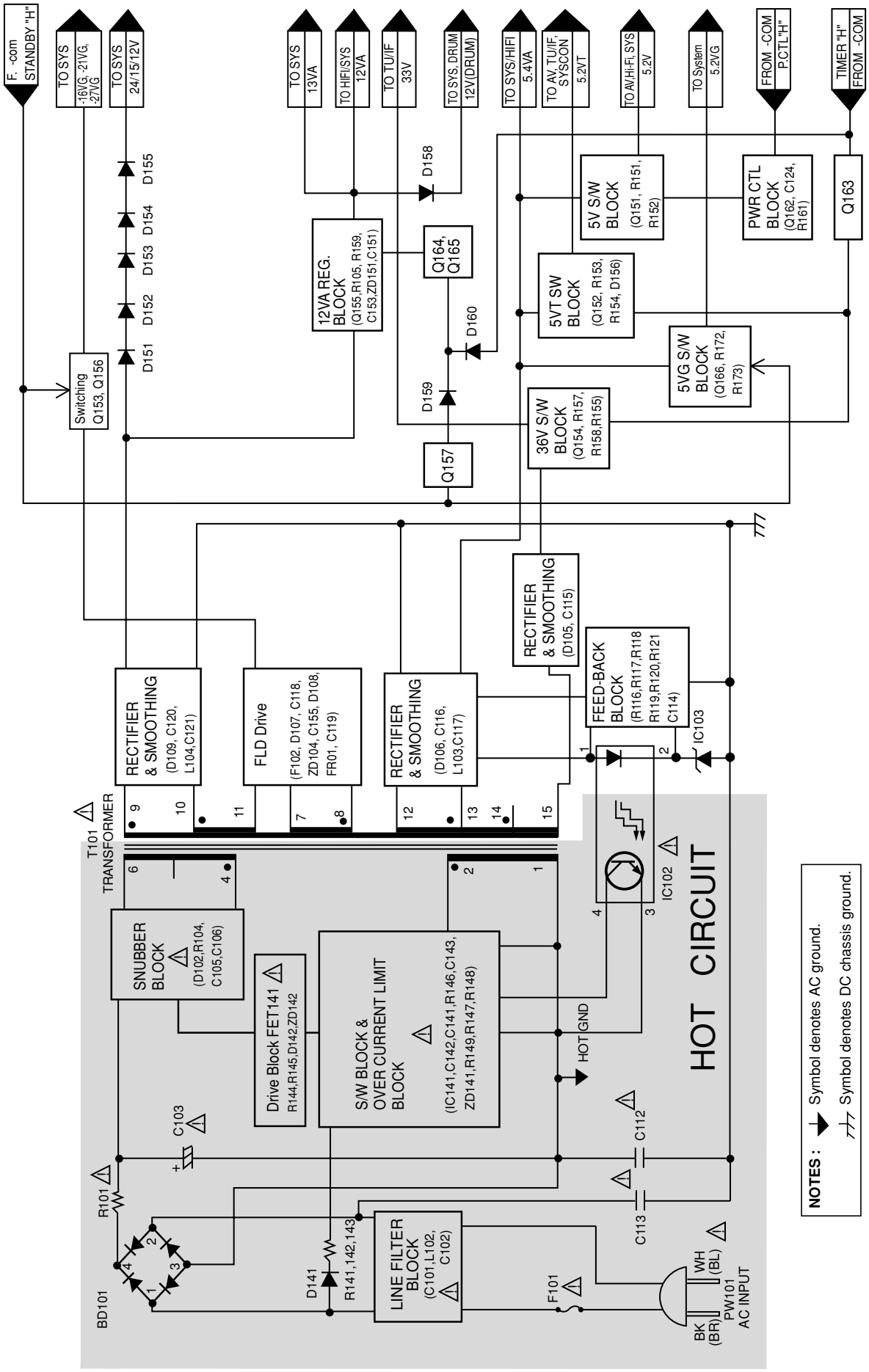

Downloaded from www.Manualslib.com manuals search engine

BLOCK DIAGRAM-2 (AUDIO SIGNAL SECTION) <HV-GX935>

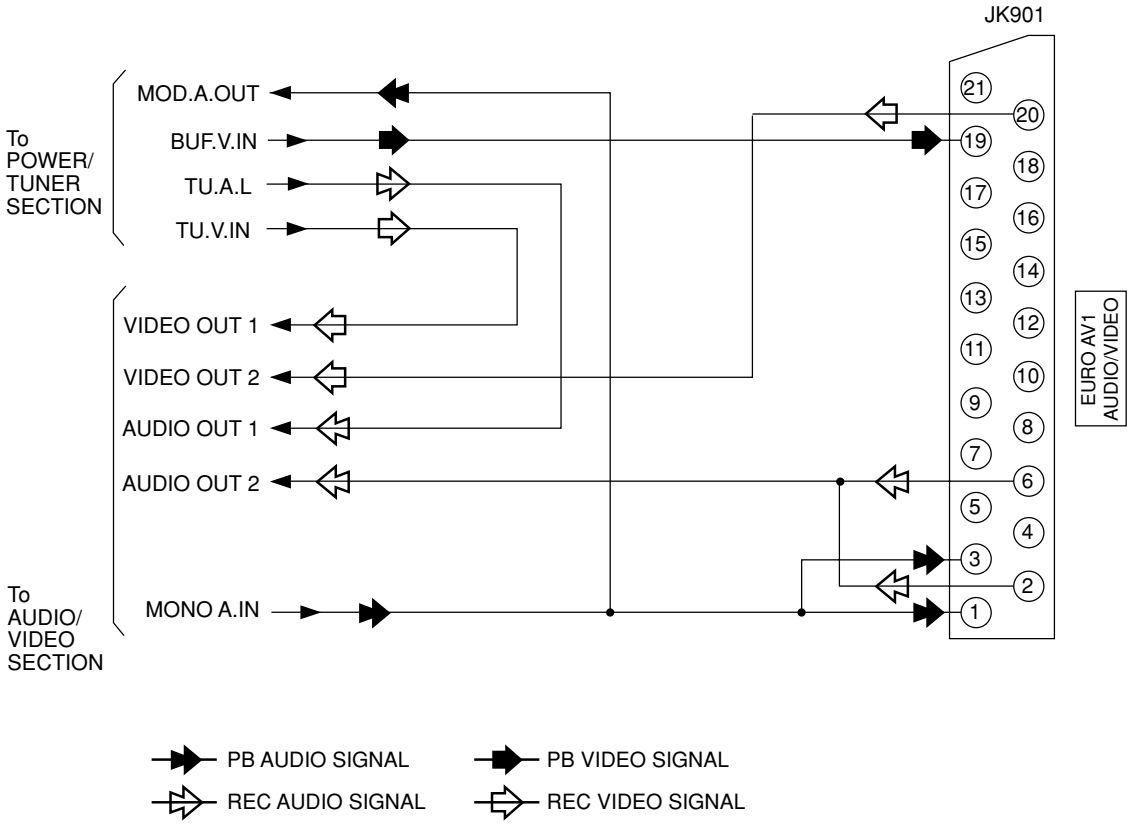

Downloaded from www.Manualslib.com manuals search engine

BLOCK DIAGRAM-3 (AUDIO SIGNAL-Hi-Fi AUDIO SECTION) <HV-FX7700/BA75>

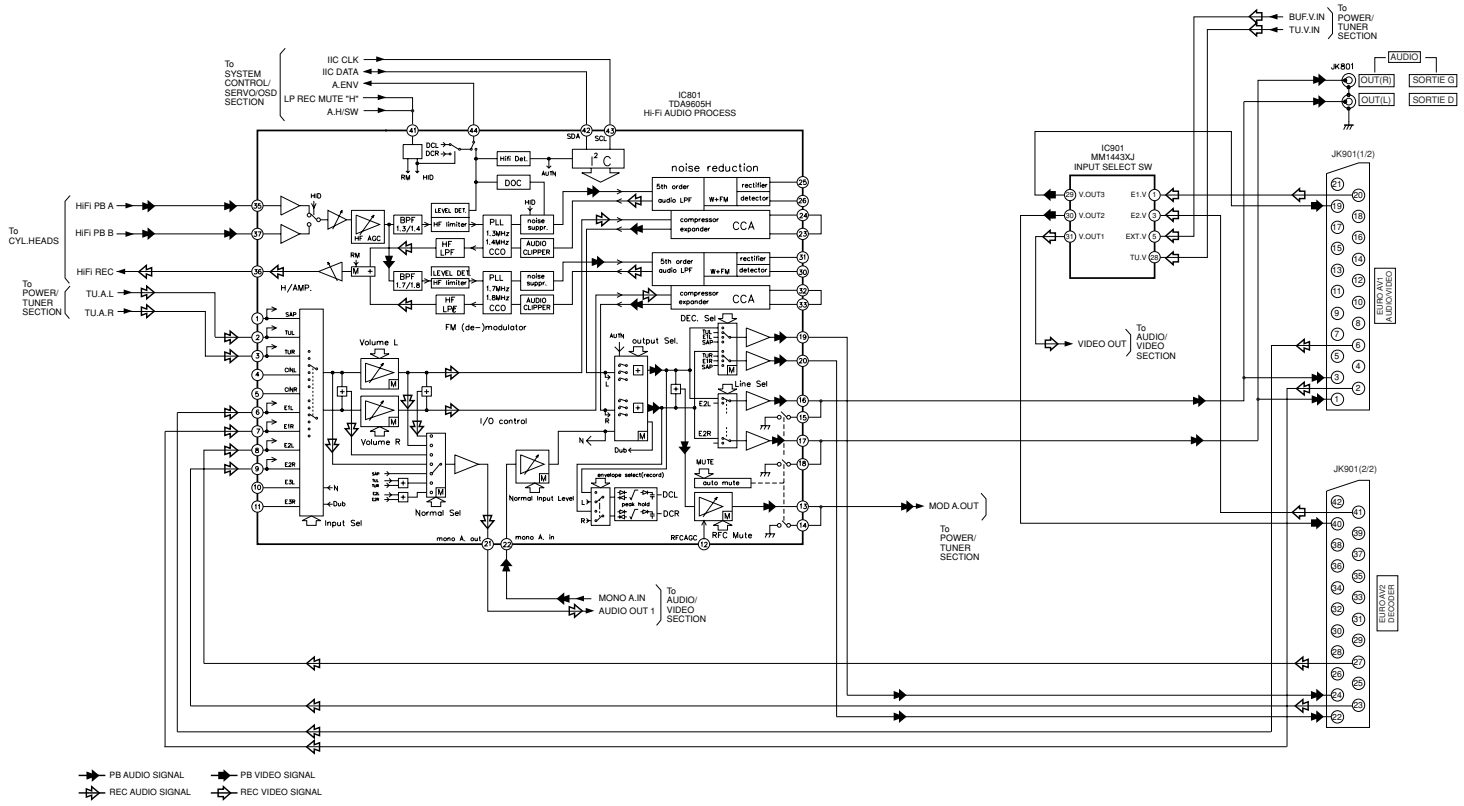

Downloaded from www.Manualslib.com manuals search engine

BLOCK DIAGRAM-4 (VIDEO SECTION)

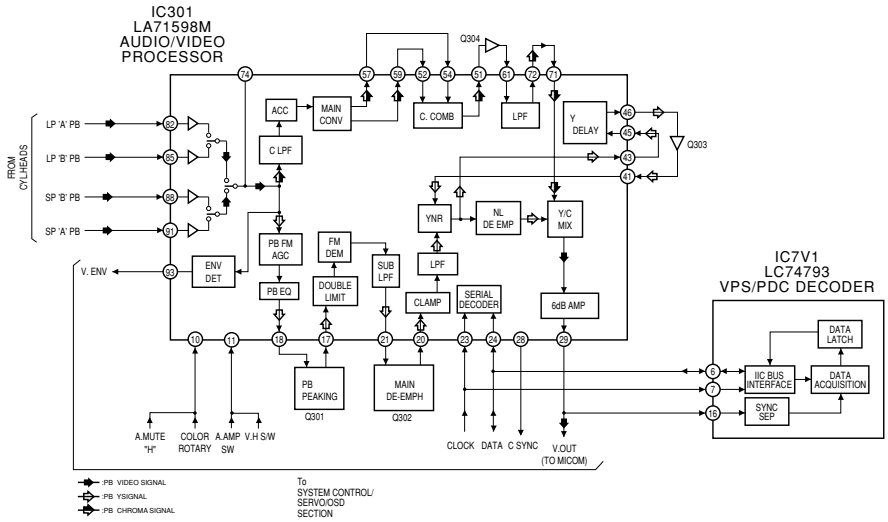

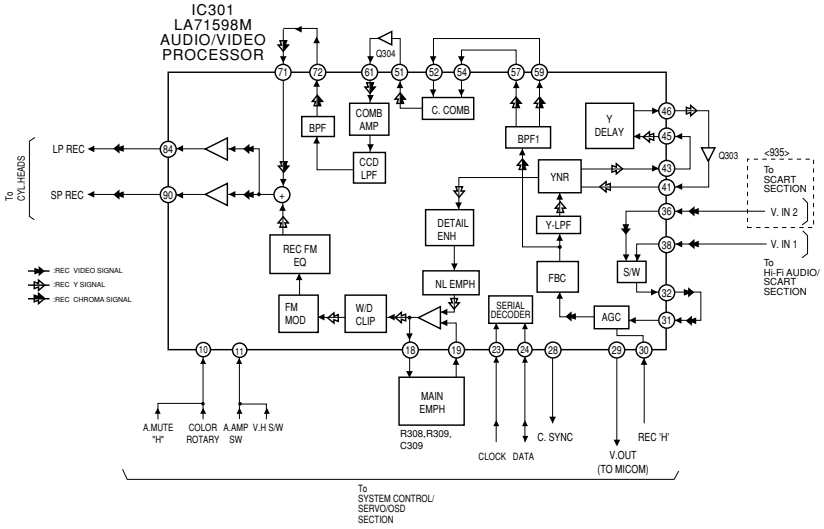

Downloaded from www.Manualslib.com manuals search engine

BLOCK DIAGRAM-5 (NORMAL AUDIO SECTION)

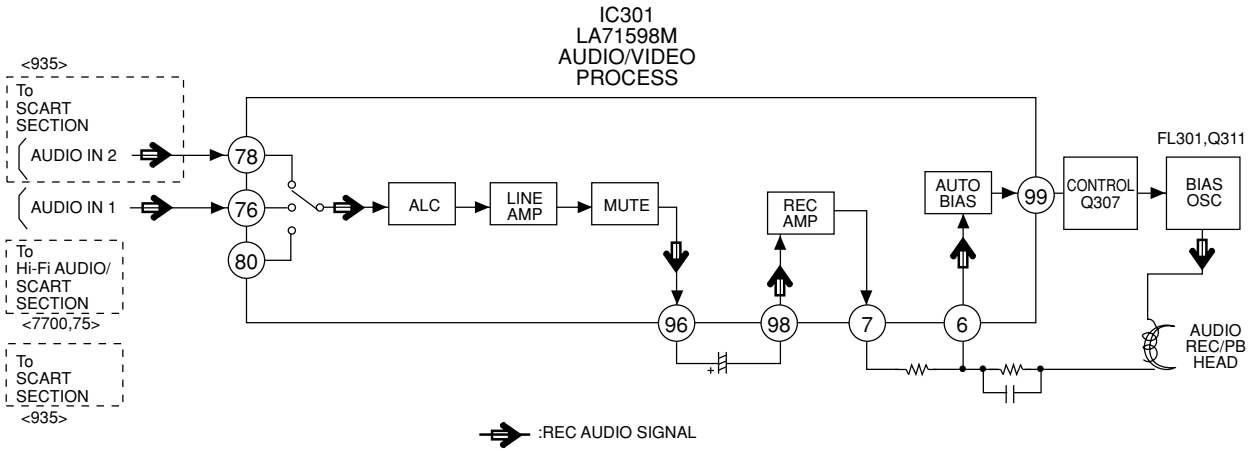

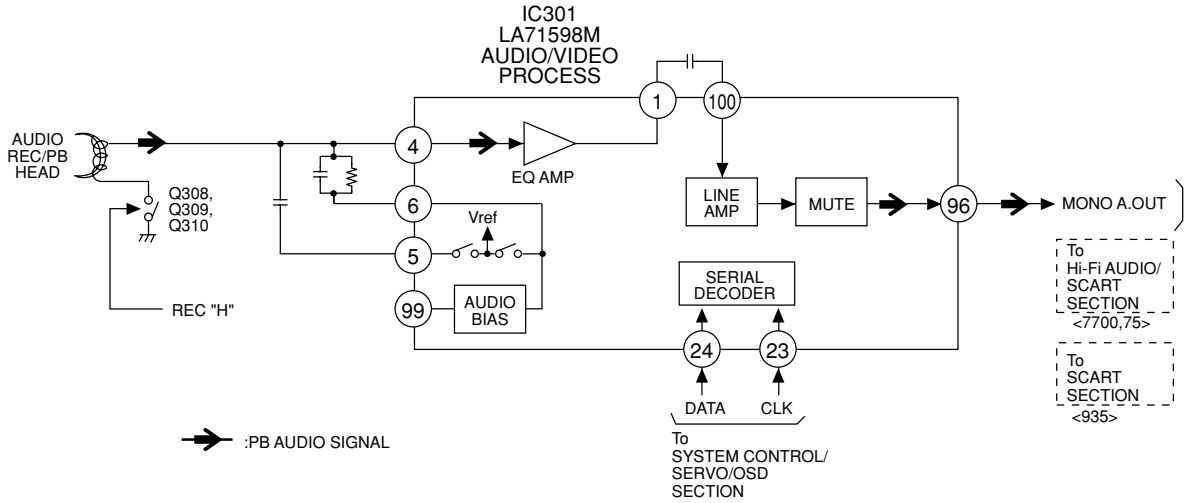

Downloaded from www.Manualslib.com manuals search engine

BLOCK DIAGRAM-6 (TUNER, NICAM/A2 SECTION)

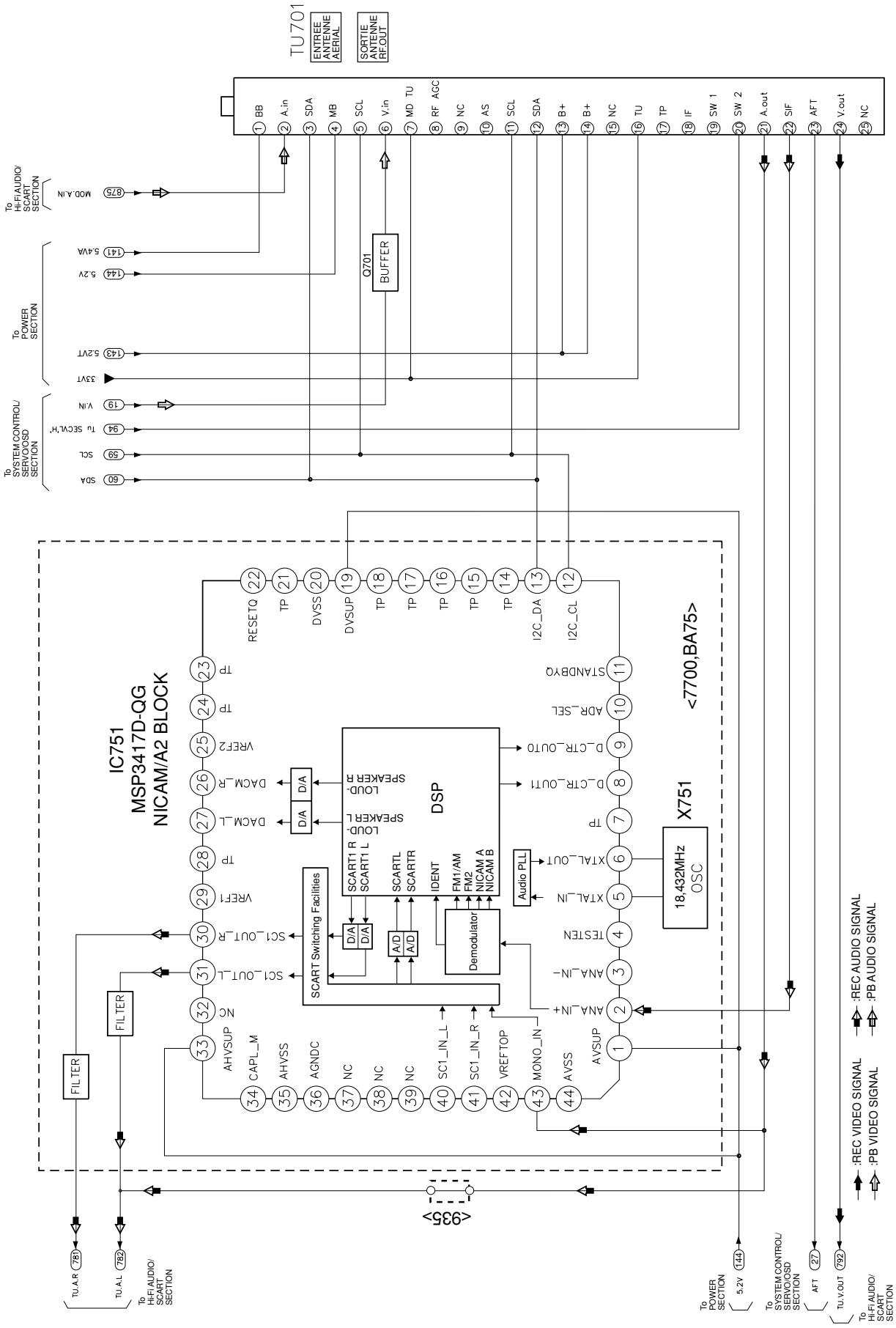

Downloaded from www.Manualslib.com manuals search engine

BLOCK DIAGRAM-7 (SYSTEM CONTROL/SERVO SECTION) <HV-FX7700/BA75>

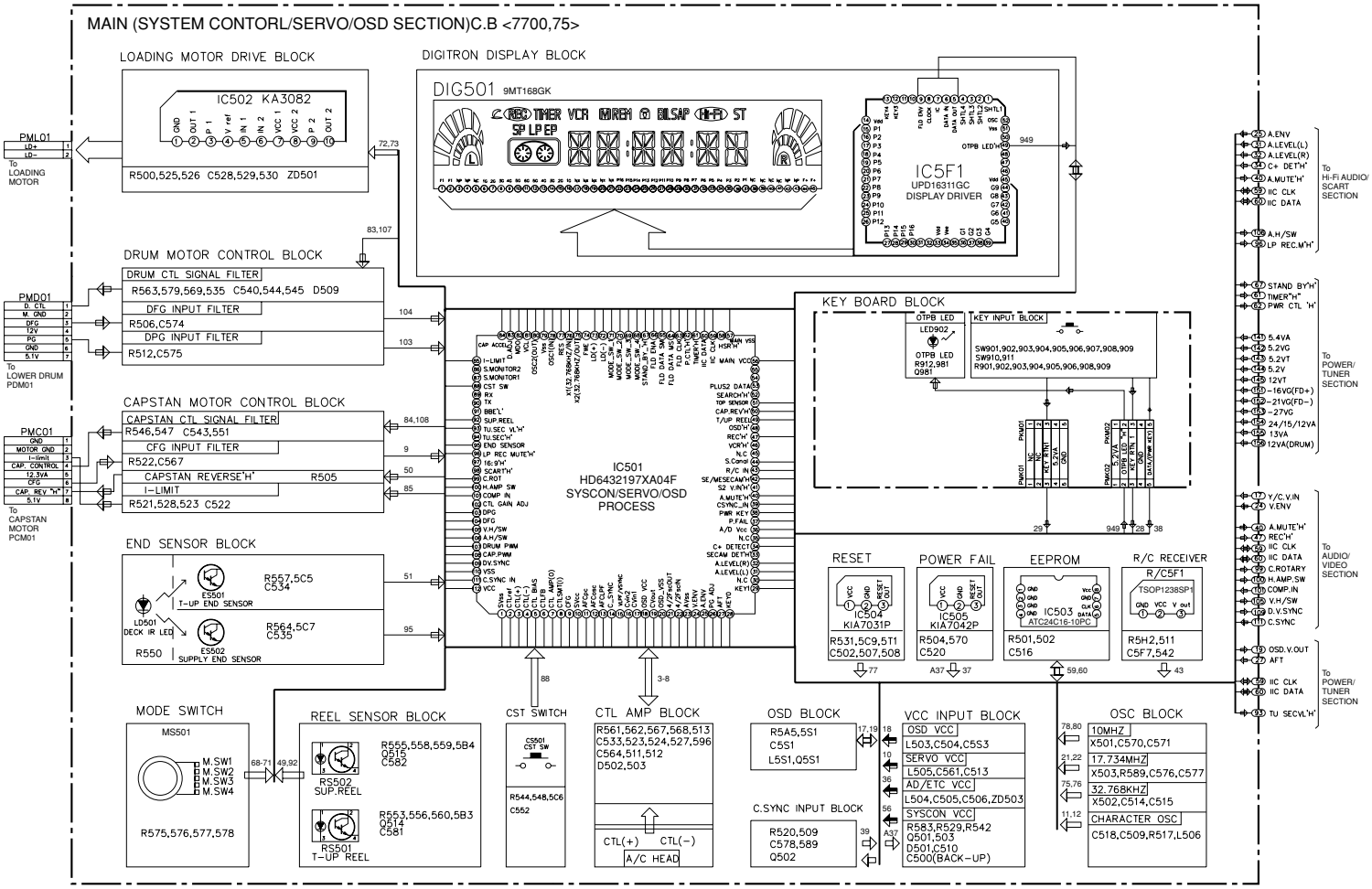

Downloaded from www.Manualslib.com manuals search engine

BLOCK DIAGRAM-8 (SYSTEM CONTROL/SERVO SECTION) <HV-GX935>

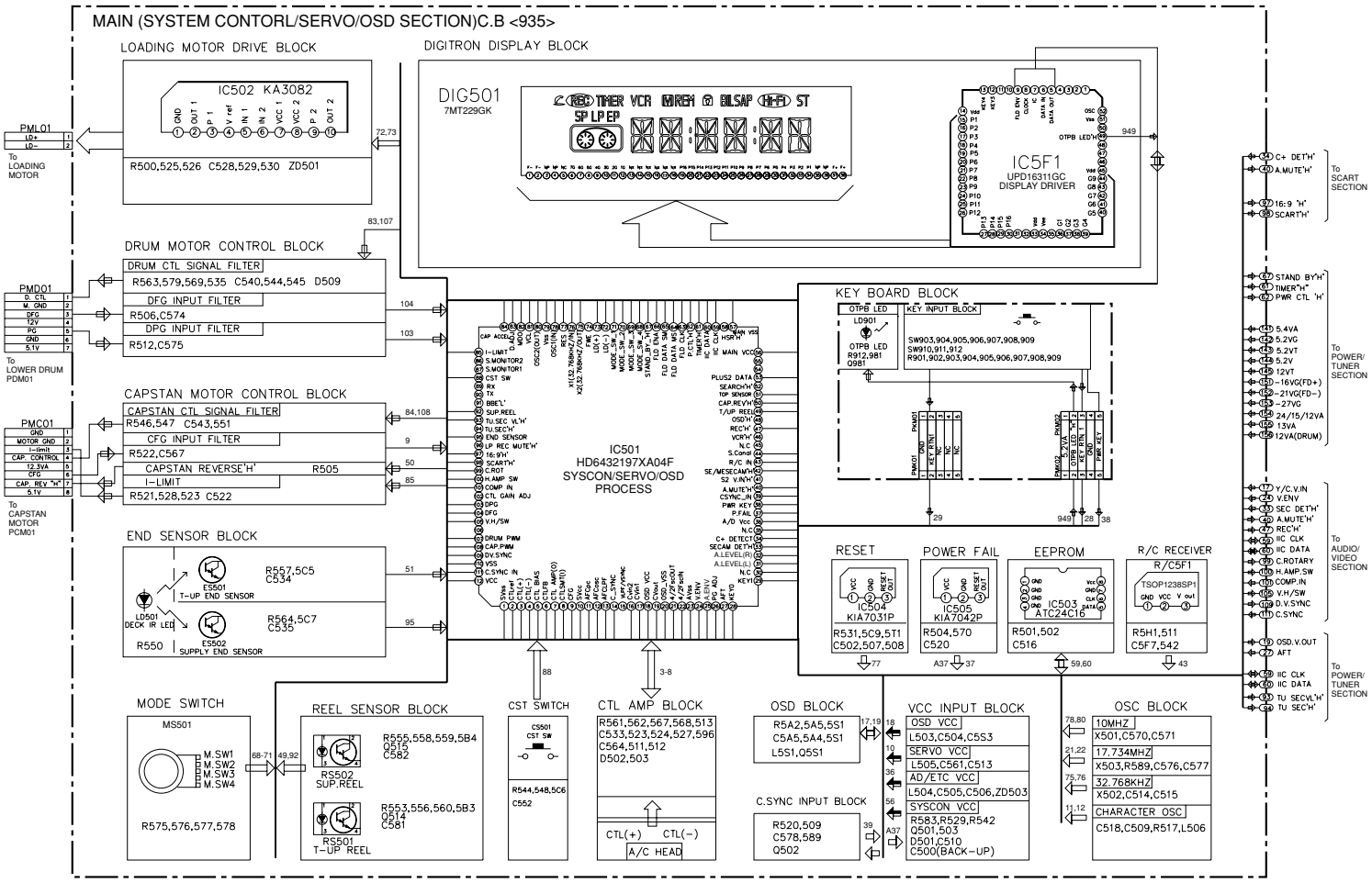

Downloaded from www.Manualslib.com manuals search engine

SCHEMATIC DIAGRAM-1 (POWER/TUNER/NICAM SECTION) <HV-FX7700/BA75>

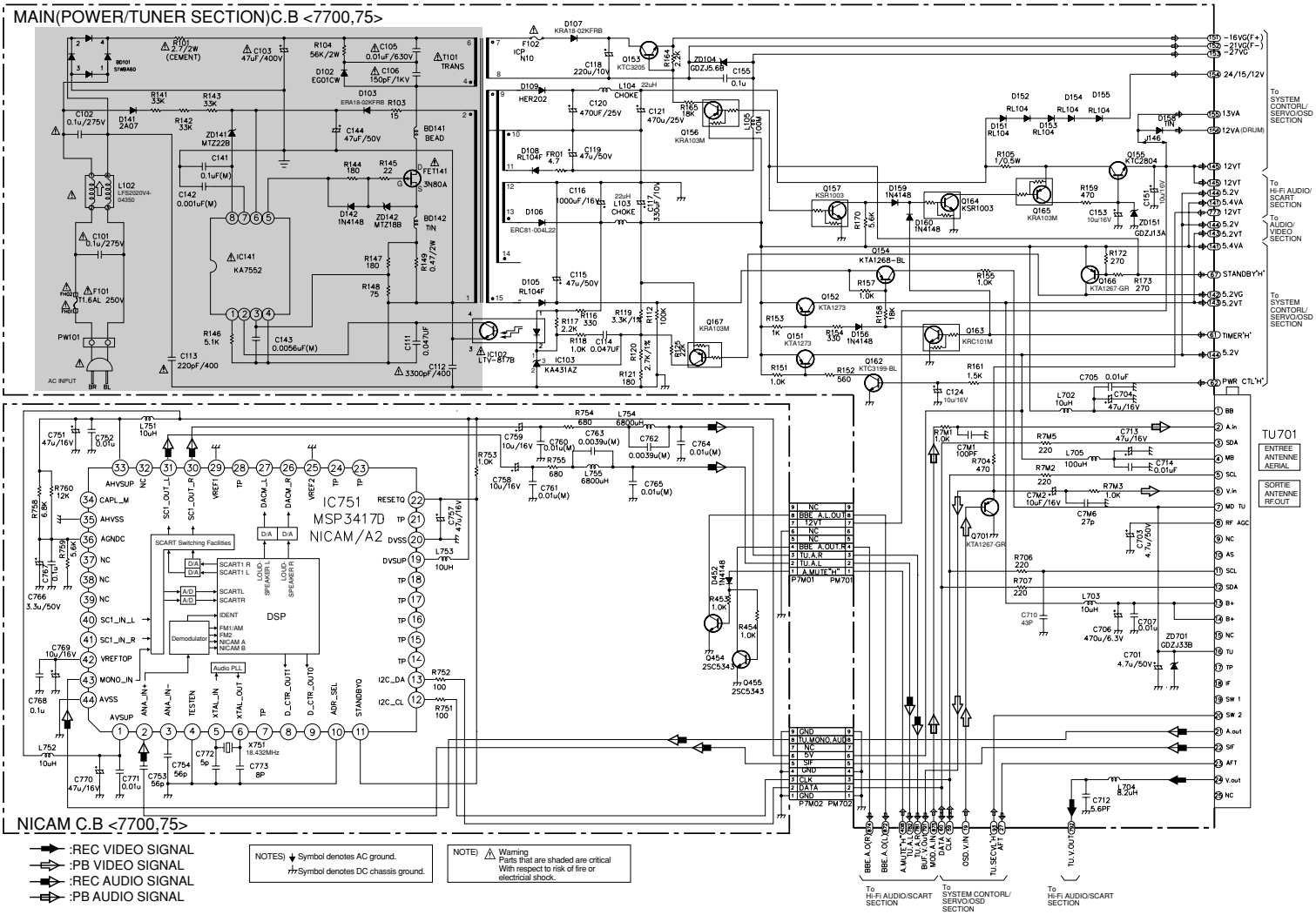

:REC VIDEO SIGNAL
:PB VIDEO SIGNAL
:REC AUDIO SIGNAL
:PB AUDIO SIGNAL

NOTES) Symbol denotes AC ground.
Symbol denotes DC chassis ground.

NOTE) Warning
Parts that are shaded are critical With respect to risk of fire or electricial shock.

Downloaded from www.Manualslib.com manuals search engine

SCHEMATIC DIAGRAM-2 (POWER/TUNER SECTION) <HV-GX935>

MAIN(POWER/TUNER SECTION)C.B <935>

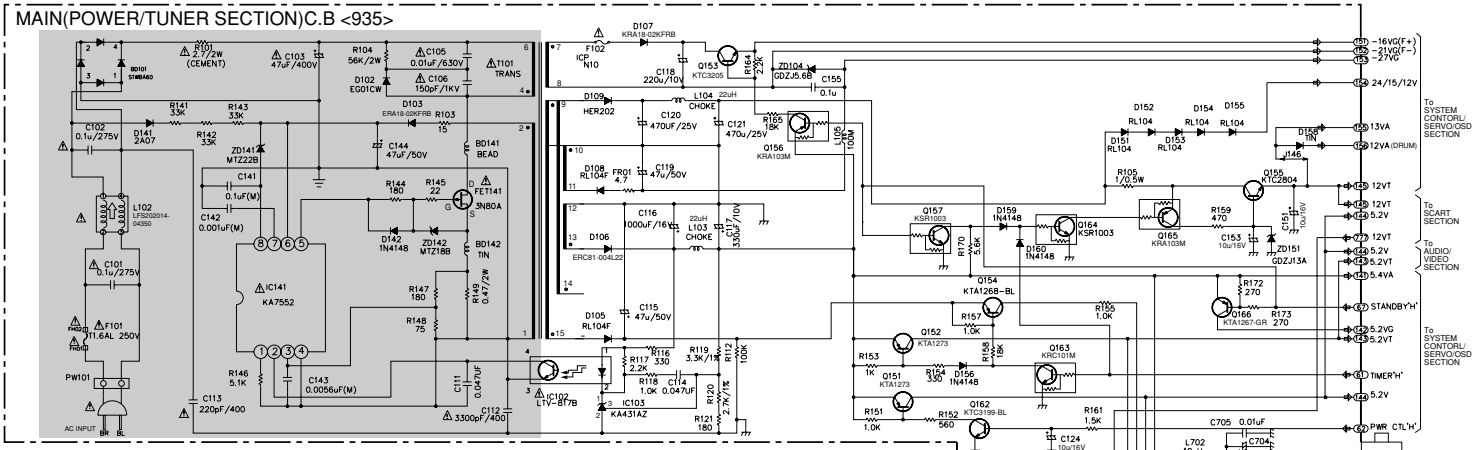

:REC VIDEO SIGNAL
:PB VIDEO SIGNAL
:REC AUDIO SIGNAL
:PB AUDIO SIGNAL

NOTES) Symbol denotes AC ground.
Symbol denotes DC chassis ground.

NOTE) ⚠ Warning
Parts that are shaded are critical
With respect to risk of fire or
electricial shock.

VOLTAGE CHART-1 (POWER SECTION)

IC102

PB	4.0	0.0
REC	4.0	0.0
4		
IC102		
1		
PB	4.9	3.9
REC	4.9	4.0

IC141

PB	3.5	2.0	17.2	3.7
REC	3.5	2.0	17.5	3.9
5				
IC141				
1				
PB	1.1	1.3	0.0	0.0
REC	1.1	1.3	0.0	0.0

IC103

	Gate		Anode		Cathode	
	PB	REC	PB	REC	PB	REC
IC103	2.5	2.5	0.0	0.0	3.9	3.9

TRANSISTOR

	Emitter		Collector		Base	
	PB	REC	PB	REC	PB	REC
Q151	11.9	11.8	14.8	15.0	12.5	12.4
Q152	9.4	9.3	11.8	11.6	10.0	9.9
Q153	11.8	11.7	14.8	15.0	12.4	12.3
Q154	-27.3	-27.9	-27.3	-27.8	-26.6	-27.0
Q155	5.3	5.3	5.2	5.3	0.0	0.0
Q156	-16.1	-16.5	-16.0	-16.4	-15.4	-15.7
Q157	5.3	5.3	5.2	5.2	0.0	0.0
Q158	35.6	36.0	35.3	35.7	35.0	35.4
Q159	5.3	5.3	5.2	5.2	4.5	4.5
Q160	0.0	0.0	0.0	0.0	5.0	5.0
Q161	0.0	0.0	0.1	0.0	5.0	5.0
Q162	5.3	5.3	5.2	5.2	4.5	4.5
Q164	5.3	5.3	5.3	5.3	4.6	4.6
Q165	0.0	0.0	10.0	10.0	0.0	0.0

NOTE:
Voltage are DC-measured with a digital voltmeter during TUNER mode.

IC BLOCK DIAGRAM-1

IC, KA7552

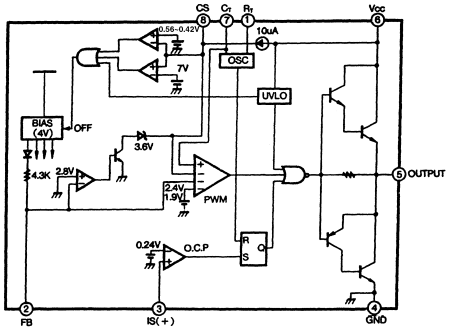

Downloaded from www.Manualslib.com manuals search engine

VOLTAGE CHART-2 (AUDIO/VIDEO SECTION)

IC301

PIN	PB	REC	PIN	PB	REC	PIN	PB	REC	PIN	PB	REC	PIN	PB	REC
1	2.44	2.42	21	2.41	2.52	41	2.93	2.92	61	3.43	3.43	81	0	0
2	2.44	2.42	22	0	0	42	3.16	3.14	62	3.31	3.32	82	0.03	0.04
3	2.46	2.44	23	4.48	4.52	43	3.02	2.05	63	5	5	83	0	0
4	2.45	2.35	24	4.19	4.23	44	0	0	64	5	5	84	0.03	0.03
5	0.09	0.88	25	1.69	1.69	45	2.34	2.33	65	2.03	2.03	85	0.03	0.03
6	2.46	2.34	26	0.05	0.06	46	1.46	1.44	66	2.66	2.67	86	0	0
7	2.46	2.34	27	0.34	0.34	47	9.13	9.12	67	3.87	3.86	87	4.87	4.80
8	0	0	28	0.34	0.34	48	1.94	1.96	68	0	0	88	1.83	3.97
9	0	0	29	1.78	1.84	49	0.85	0.85	69	0.80	1.27	89	0	0
10	0.93	0.93	30	1.10	4.57	50	0	0	70	1.98	2.92	90	1.83	3.95
11	1.68	1.68	31	2.97	2.94	51	1.83	1.82	71	2.52	2.51	91	1.83	3.98
12	4.98	2.60	32	-	2.3	52	2.71	2.62	72	3.37	1.73	92	0.02	1.55
13	1.49	1.52	33	1.45	1.37	53	0	0	73	3.8	3.17	93	2.17	0.01
14	1.68	1.38	34	1.81	1.79	54	2.62	2.62	74	1.55	0.01	94	0	2.01
15	2.34	2.32	35	3.25	3.22	55	4.91	4.91	75	4.96	4.94	95	0	0
16	5.01	5.02	36	1.82	1.95	56	0.56	0.57	76	2.43	2.41	96	2.29	2.38
17	3.08	0.15	37	4.79	4.79	57	3.44	3.44	77	0.01	0.14	97	0	0
18	1.98	2.45	38	1.81	2.25	58	5.00	5.00	78	2.42	2.42	98	2.43	2.41
19	1.18	2.45	39	4.10	4.10	59	3.36	3.37	79	2.46	2.45	99	5.08	4.28
20	3.01	3.05	40	5.00	5.00	60	3.31	3.31	80	2.43	2.23	100	2.43	2.60

IC7V1

PIN	PB/ REC
1	0
2	2.6
3	5.1
4	5.1
5	0
6	4.8
7	4.9
8	5.1
9	4.7
10	0
11	2.2
12	2.2
13	0.9
14	0
15	5.1
16	3.0
17	2.6
18	4.7
19	5.1
20	5.0
21	0
22	4.5
23	5.1
24	0

TRANSISTOR

	PB mode			REC mode		
	E	C	B	E	C	B
Q301	1.213	3.930	1.864	1.783	3.348	2.435
Q302	1.548	5.158	2.191	1.813	5.147	2.452
Q303	2.151	0	1.499	2.147	0	1.494
Q304	1.217	5.061	1.835	1.216	5.039	1.824
Q305	2.383	0	1.705	2.420	0	1.749
Q306	1.222	0	0.546	1.221	0	0.557
Q307	5.258	0.280	5.176	5.186	3.301	4.352
Q308	0	0	0.744	15.827	0	-21.49
Q309	0	0	0.720	-5.69	0	-21.77
Q310	5.256	5.180	4.053	5.189	-21.64	5.148
Q311	1.224	3.923	1.872	0.271	3.190	0.636
Q3A1	0	5.251	0	1.258	5.179	1.766
Q201	1.313	5.135	1.924	0.625	5.115	0.092
Q202	1.314	5.135	1.237	0.624	5.120	1.219
Q203	0	1.924	0.016	0	0.092	5.111

Downloaded from www.Manualslib.com manuals search engine

WAVEFORMS-1 (AUDIO/VIDEO SECTION)

① 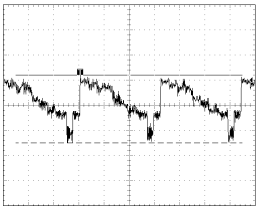

IC301 Pin ⑳
500mVp-p
PB mode

② 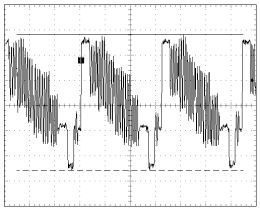

IC301 Pin ㊳, ㉜, ㉛
1Vp-p
Video in

③ 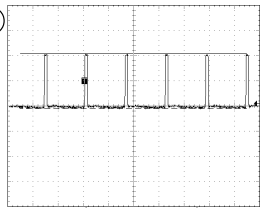

IC301 Pin ㉘
4.2Vp-p
PB/REC modes

④ 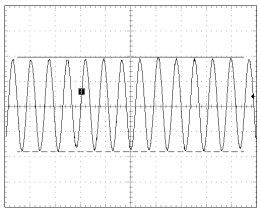

IC301Pin ⑦
1.4Vp-p
REC mode

⑤ 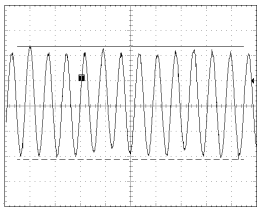

IC301 Pin ⑥
2.2Vp-p
REC mode

⑥ 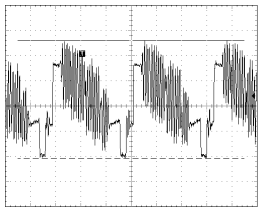

IC301 Pin ㉙
2.1Vp-p
PB mode

⑦ 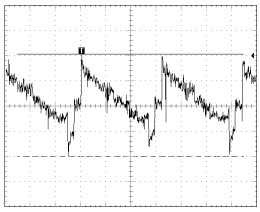

IC301 Pin ㊶
400mVp-p
PB mode

⑧ 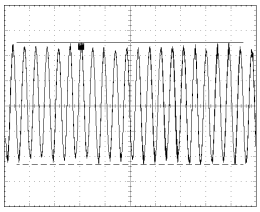

IC301 Pin ⑥⑦
600mVp-p
PB mode

⑨ 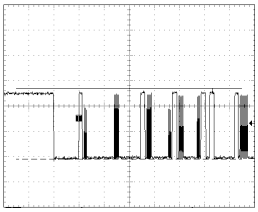

IC301 Pin ㉓
5Vp-p
PB/REC modes

⑩ 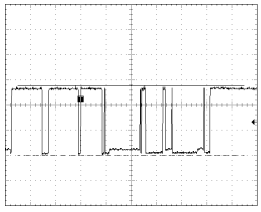

IC301 Pin ㉔
5Vp-p
PB/REC modes

⑪ 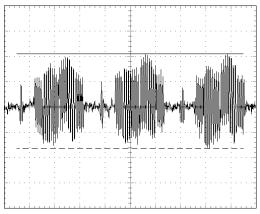

IC301 Pin ⑦①, ⑦②
340mVp-p
REC mode

⑫ 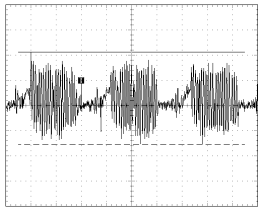

IC301 Pin ⑤①, ⑤②, ⑤④
300mVp-p
PB mode

⑬ 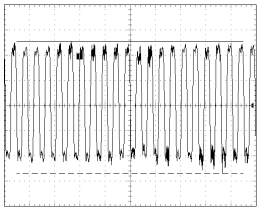

IC301 Pin ⑥⑥
600mVp-p
PB mode

⑭ 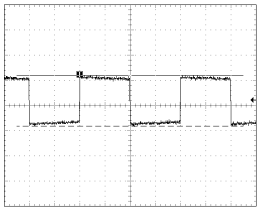

IC301 Pin ⑪
3.2Vp-p
PB mode

⑮ 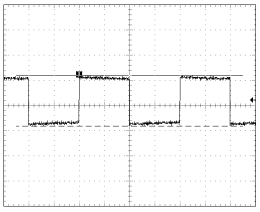

IC301 Pin ⑩
1.8Vp-p
PB mode

⑯ 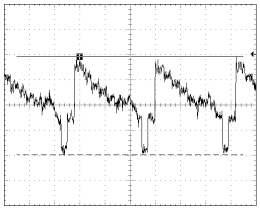

IC301 Pin ④③
400mVp-p
PB mode

IC BLOCK DIAGRAM-2

IC, LC74793

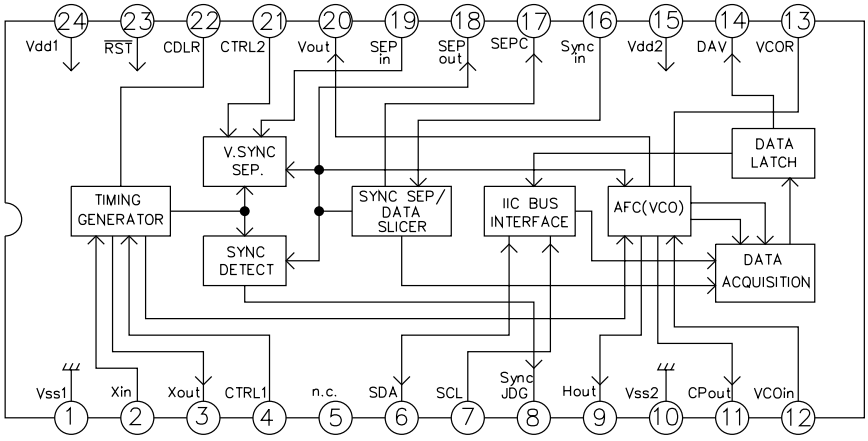

Downloaded from www.Manualslib.com manuals search engine

SCHEMATIC DIAGRAM-3 (AUDIO/VIDEO SECTION)

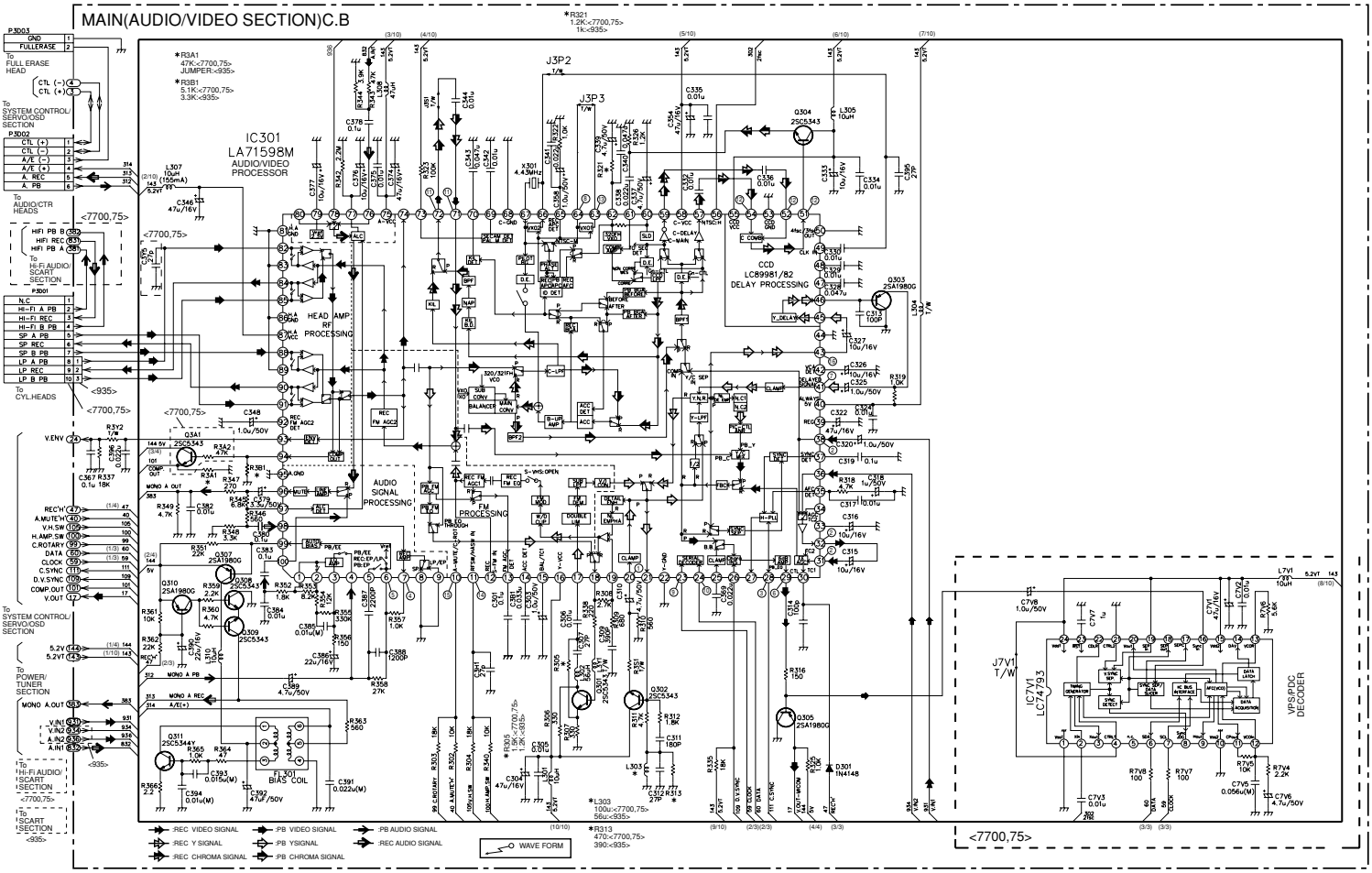

Downloaded from www.Manualslib.com manuals search engine

SCHEMATIC DIAGRAM-4 (Hi-Fi AUDIO/SCART SECTION) <HV-FX7700/BA75>

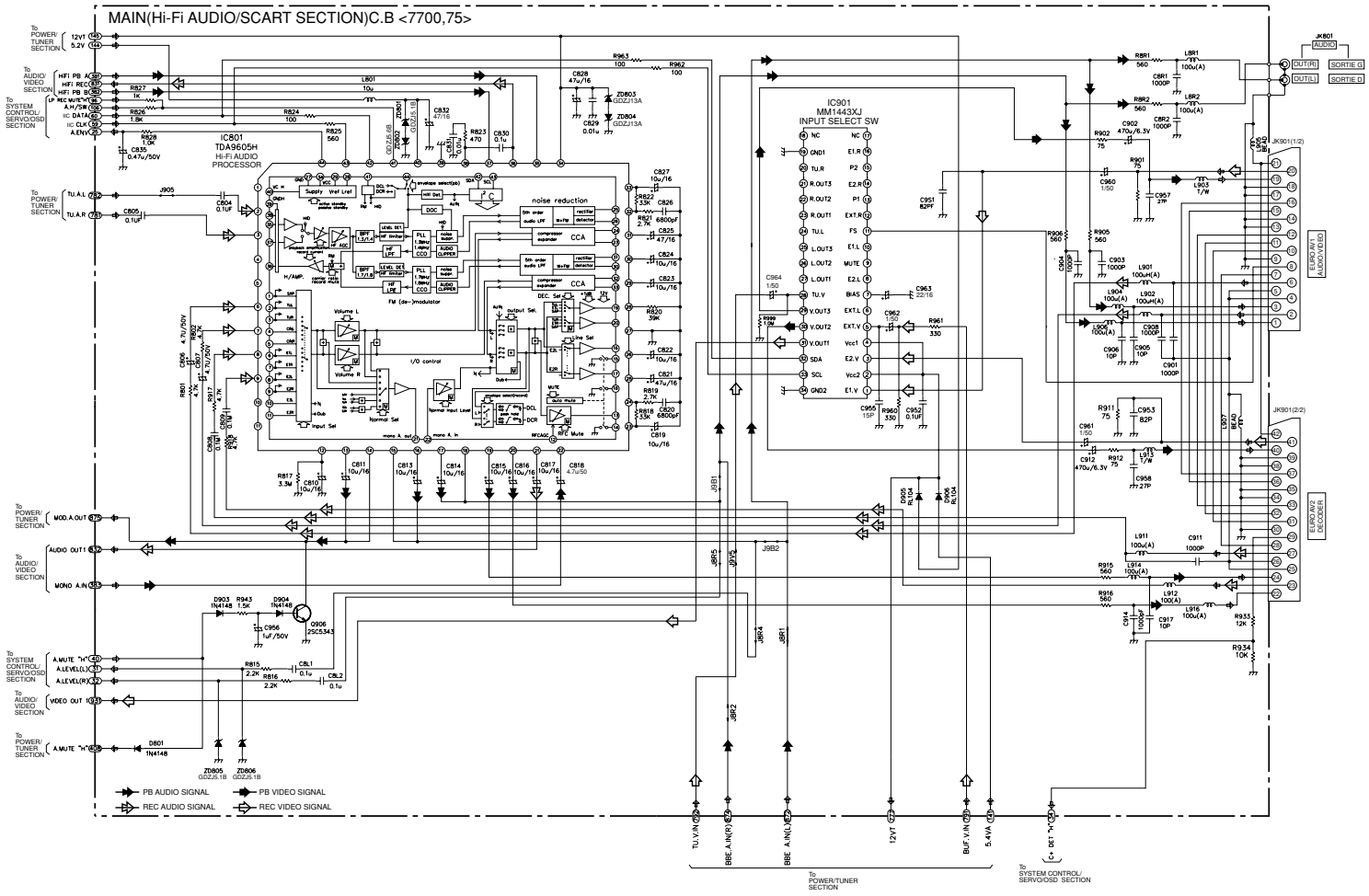

Downloaded from www.Manualslib.com manuals search engine

VOLTAGE CHART-3
(Hi-Fi AUDIO/SCART SECTION)

IC801

PB	3.6	4.4	4.2	0.9	5.1	0.0	0.0	0.7	0.6	0.7	11.9	3.9	3.9	3.9	0.8	3.9	3.9	0.0	0.8	3.9	3.9	3.9
REC	1.9	4.4	4.1	0.9	5.0	0.0	4.2	4.3	4.2	4.3	12.0	3.9	3.9	3.9	0.8	3.9	3.9	0.0	0.8	3.9	3.9	3.9
					40					35					30					25		

IC801(TDA9605H)

					5						10						15						20					
PB	3.8	3.9	3.9	3.9	3.8	3.8	3.8	3.8	3.8	3.8	3.8	0.0	3.9	0.0	0.0	6.0	6.0	0.0	6.0	6.0	4.5	3.8
REC	3.8	3.9	3.9	3.9	3.8	3.8	3.8	3.8	3.8	3.9	3.9	0.0	3.8	0.0	0.0	6.0	6.0	0.0	6.0	6.1	4.6	3.8

IC901

PB	0	4.8	4.7	3.8	1.5	1.5	3.3	5.5	5.5	5.5	5.5	5.5	5.5	5.5	5.5		0
REC	0	4.8	4.7	3.8	1.5	1.5	3.3	5.5	5.5	5.5	5.5	5.5	5.5	5.5	5.5		0
					30					25					20		

IC901(MM1443)

					5					10					15		
PB	2.7	11.6	2.7	11.6	3.5	5.5	5.5	5.5	0	5.5	11.7	5.5	0	5.5	0	5.5	0
REC	2.7	11.6	2.7	11.6	3.5	5.5	5.5	5.5	0	5.5	11.7	5.5	0	5.5	0	5.5	0

IC BLOCK DIAGRAM-3

IC, MM1443XJ

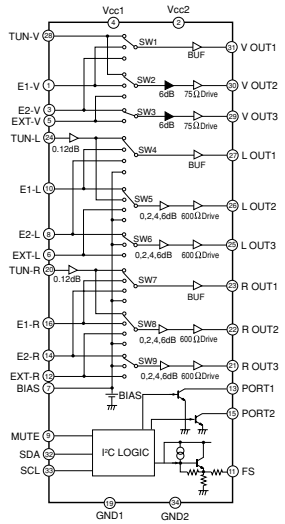

SCHEMATIC DIAGRAM-5 (SCART SECTION) <HV-GX935>

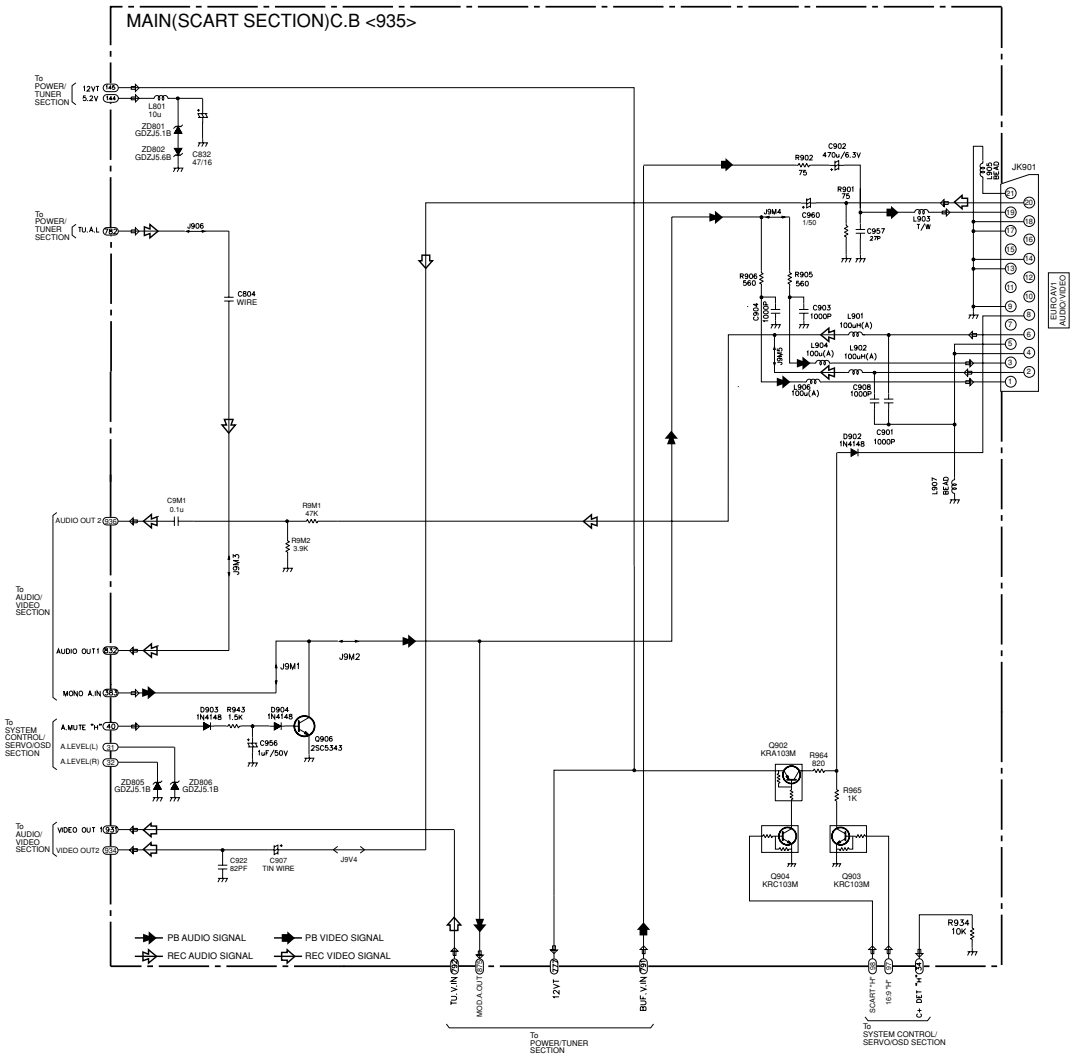

Downloaded from www.Manualslib.com manuals search engine

SCHEMATIC DIAGRAM-6 (SYSTEM CONTROL/SERVO SECTION) <HV-FX7700/BA75>

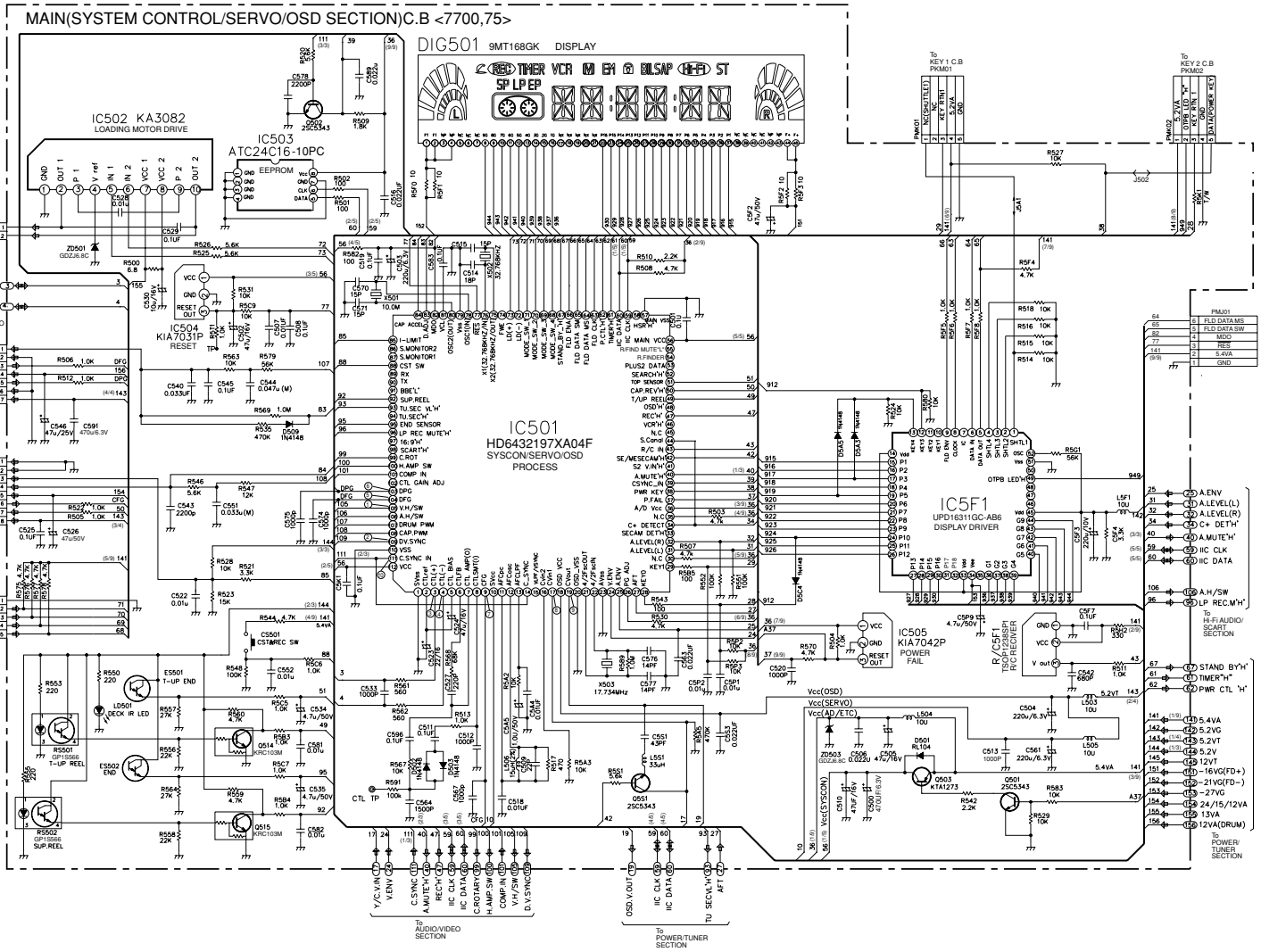

Downloaded from www.Manualslib.com manuals search engine

VOLTAGE CHART-4 (SYSTEM CONTROL/SERVO SECTION)

IC501

PIN	PB	REC	PIN	PB	REC	PIN	PB	REC	PIN	PB	REC	PIN	PB	REC	PIN	PB	REC
1	0	0	21	2.45	2.47	41	0	0	61	5.15	5.15	81	3.37	3.37	101	0	1.44
2	2.54	2.42	22	2.42	2.42	42	0	0	62	5.0	5.0	82	5.26	5.26	102	5.25	5.25
3	2.54	2.44	23	0	0	43	5.05	5.05	63	PULSE	PULSE	83	2.5	2.5	103	PULSE	PULSE
4	2.54	2.35	24	2.30	0	44	0	0	64	PULSE	PULSE	84	2.78	2.79	104	PULSE	PULSE
5	2.54	0.88	25	0.8 (MONO)	0	45	5.25	5.28	65	5.30	5.30	85	3.12	3.10	105	H/L	H/L
6	2.55	2.34	26	5.28	5.27	46	0	0	66	PULSE	PULSE	86	H/L	H/L	106	H/L	H/L
7	2.65	2.34	27	4.67	4.71	47	0	5.23	67	0.85	0.85	87	H/L	H/L	107	H/L	H/L
8	2.53	0	28	5.28	5.28	48	0	0	68	5.30	5.30	88	5.04/0	0	108	H/L	H/L
9	PULSE	0	29	5.28	5.28	49	H/L	H/L	69	0	0	89	0.33	0.30	109	0	0
10	5.11	0.93	30	5.25	5.28	50	0	0	70	5.30	5.31	90	0	0	110	0	0
11	1.91	1.68	31	*	*	51	0	0	71	5.30	5.31	91	5.23	5.23	111	PULSE	PULSE
12	1.92	2.60	32	*	*	52	0	0	72	5.20	5.20	92	H/L	H/L	112	5.26	5.26
13	2.23	1.52	33	0.47	0.44	53	0	0	73	5.20	5.20	93	0	0			
14	PULSE	PULSE	34	0	0	54	3.18	3.20	74	0	0	94	0	0			
15	0.37	2.32	35	5.28	5.28	55	5.25	5.25	75	1.57	1.58	95	0	0			
16	2.01	5.02	36	5.28	5.28	56	5.26	5.26	76	1.40	1.40	96	0	0			
17	2.41	0.15	37	4.86	4.86	57	0	0	77	5.25	5.25	97	0	0			
18	5.11	2.45	38	5.28	5.28	58	0	0	78	2.56	2.56	98	5.25	5.25			
19	2.48	2.45	39	2.17	2.18	59	PULSE	PULSE	79	0	0	99	H/L	H/L			
20	0	0	40	0	0	60	PULSE	PULSE	80	2.56	2.56	100	0(SP)/5.25(LP)				

- * 31, *32:Voltage level is different as the TAPE.
  * 88: CST TAB of thr TAPE: 0 VOLT
  NOCST TAB of the TAPE: 5.04 VOLT

IC502

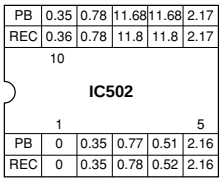

IC504

PIN	PB/REC
1	5.3
2	0
3	5.2

IC503

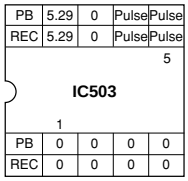

IC505

PIN	PB/REC
1	5.3
2	0
3	5.2

SYSTEM IC

	Emitter		Collector		Base	
	PB	REC	PB	REC	PB	REC
Q501	0	0	0	0	0.66	0.66
Q502	0	0	2.17	2.18	0.26	0.28
Q503	5.29	5.29	5.27	5.26	4.8	4.59
Q5S1	0.46	0.44	2.43	2.36	0	0
Q5Y1	12.00	12.05	0	0	12.00	12.05
Q5Y2	0	0	12.01	12.08	0	0
Q514	0	0	H/L	H/L	H/L	H/L
Q515	0	0	H/L	H/L	H/L	H/L

IC5F1

PIN	PB/REC	PIN	PB/REC	PIN	PB/REC	PIN	PB/REC
1	0	14	5.27	27	-30.2	40	-26.9
2	0	15	0	28	-29.3	41	-27.1
3	0	16	-23.6	29	29.3	42	-27.1
4	0	17	-14.2	30	0	43	-27.1
5	5.3	18	-23.6	31	0	44	5.3
6	5.05	19	-29.9	32	-13.7	45	5.3
7	5.27	20	-26.6	33	5.3	46	5.2
8	5.11	21	-9.7	34	-30.4	47	5.3
9	4.89	22	-6.9	35	-3.9	48	0.85
10	0.27	23	-16.5	36	-26.7	49	0
11	0.27	24	-16.5	37	-26.7	50	0
12	0.39	25	-7	38	-26.7	51	0
13	2.77	26	-30.2	39	-26.7	52	0

Downloaded from www.Manualslib.com manuals search engine

WAVEFORMS-2 (SYSTEM CONTROL/SERVO SECTION)

1
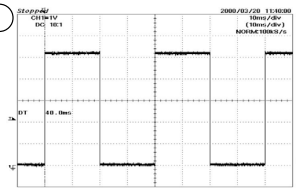

V.H/SW
(IC501 Pin 105)
1V/10mS
REC/PB modes

2
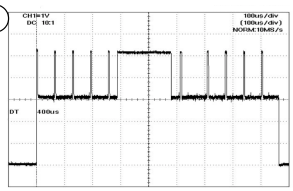

DV-SYNC
(IC501 Pin 109)
1V/100µS
QUE/REV modes

3
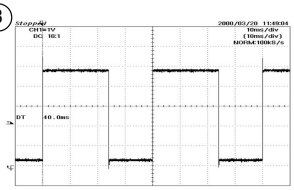

CTL+
(IC501 Pin 3)
1V/10mS

4
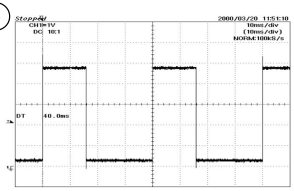

CTL–
(IC501 Pin 4)
1V/10mS

5
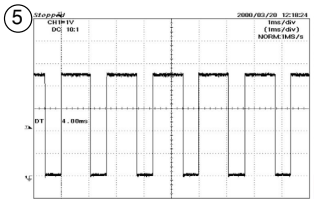

DFG
(IC501 Pin 104)
1V/1mS
REC/PB mode

6
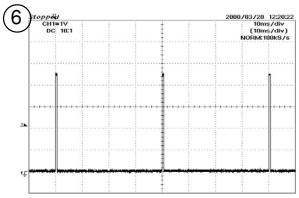

DPG
(IC501 Pin 103)
1V/10mS
REC/PB modes

7
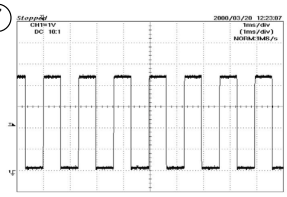

CFG
(IC501 Pin 9)
1V/10mS

8
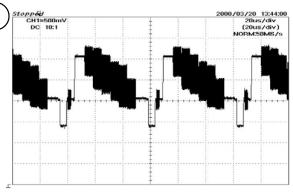

V-IN
(IC501 Pin 17)
500mV/20µS

9
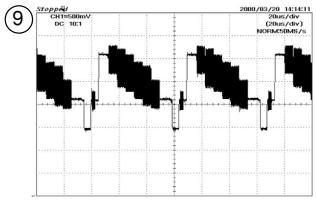

V-OUT
(IC501 Pin 19)
500mV/20µS
EE/PB modes

10
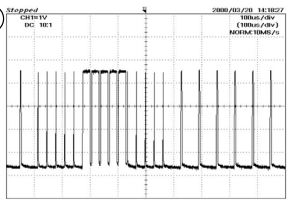

C-SYNC
(IC501Pin 111)
1V/100µS
EE/PB modes

Downloaded from www.Manualslib.com manuals search engine

SCHEMATIC DIAGRAM-7 (SYSTEM CONTROL/SERVO SECTION) <HV-GX935>

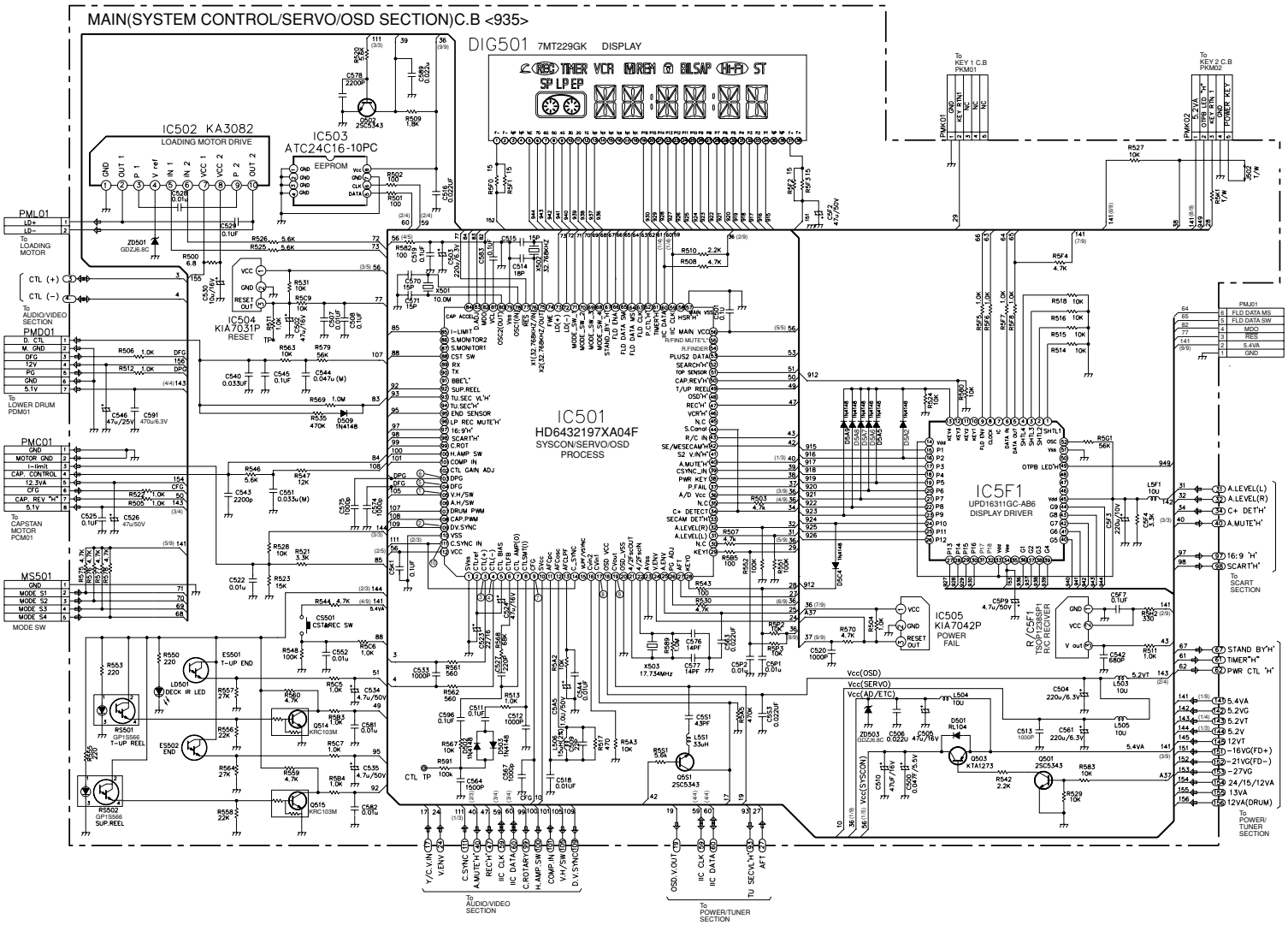

Downloaded from www.Manualslib.com manuals search engine

FL DISPLAY-1 <HV-FX7700/BA75>

• GRID ASSIGNMENT

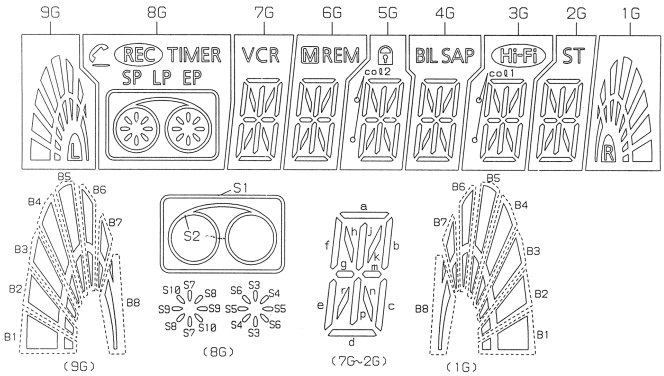

• ANODE CONNECTION

	9G	8G	7G	6G	5G	4G	3G	2G	1G
P1	-	TIMER	VCR	M		SAP	Hi-Fi	ST	-
P2	-	REC	-	REM	col2	BIL	col1	-	-
P3	B4		a	a	a	a	a	a	B4
P4	B5	EP	h	h	h	h	h	h	B5
P5	B6	LP	j	j	j	j	j	j	B6
P6	B7	SP	k	k	k	k	k	k	B7
P7	B8	S1	b	b	b	b	b	b	B8
P8	B3	S2	f	f	f	f	f	f	B3
P9	B2	S3	m	m	m	m	m	m	B2
P10	B1	S4	g	g	g	g	g	g	B1
P11	L	S5	c	c	c	c	c	c	R
P12	-	S6	e	e	e	e	e	e	-
P13	-	S7	r	r	r	r	r	r	-
P14	-	S8	p	p	p	p	p	p	-
P15	-	S9	n	n	n	n	n	n	-
P16	-	S10	d	d	d	d	d	d	-

FL DISPLAY-2 <HV-GX935>

• GRID ASSIGNMENT

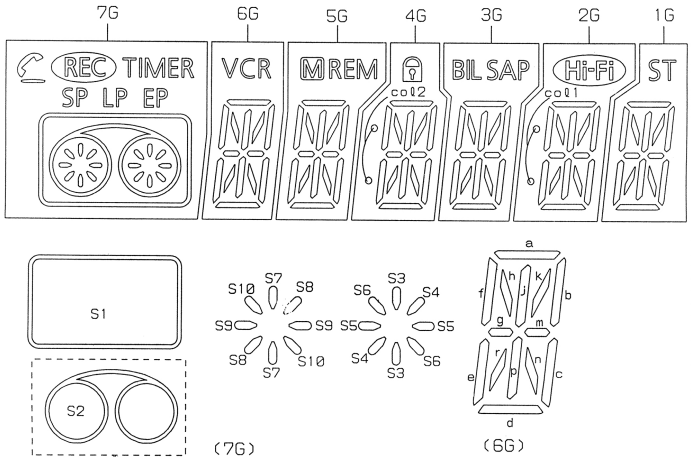

• ANODE CONNECTION

	7G	6G	5G	4G	3G	2G	1G
P1	TIMER	VCR	M		SAP	Hi-Fi	ST
P2	REC	-	REM	col2	BIL	col1	-
P3		a	a	a	a	a	a
P4	EP	h	h	h	h	h	h
P5	LP	j	j	j	j	j	j
P6	SP	k	k	k	k	k	k
P7	S1	b	b	b	b	b	b
P8	S2	f	f	f	f	f	f
P9	S3	m	m	m	m	m	m
P10	S4	g	g	g	g	g	g
P11	S5	c	c	c	c	c	c
P12	S6	e	e	e	e	e	e
P13	S7	r	r	r	r	r	r
P14	S8	p	p	p	p	p	p
P15	S9	n	n	n	n	n	n
P16	S10	d	d	d	d	d	d

Downloaded from www.Manualslib.com manuals search engine

WIRING-1 (MAIN C.B) <HV-FX7700/BA75>

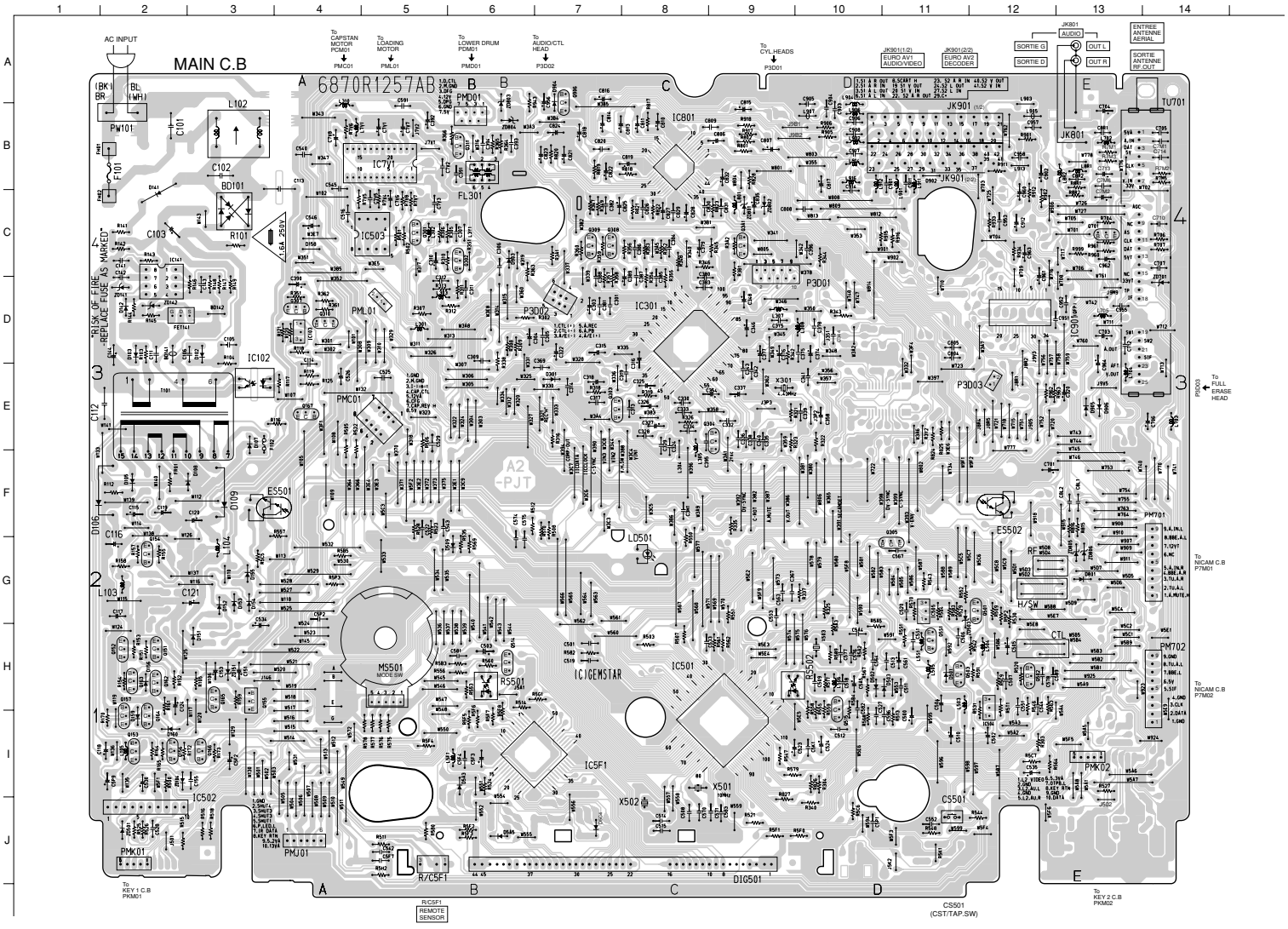

Downloaded from www.Manualslib.com manuals search engine

WIRING-2 (MAIN C.B) <HV-GX935>

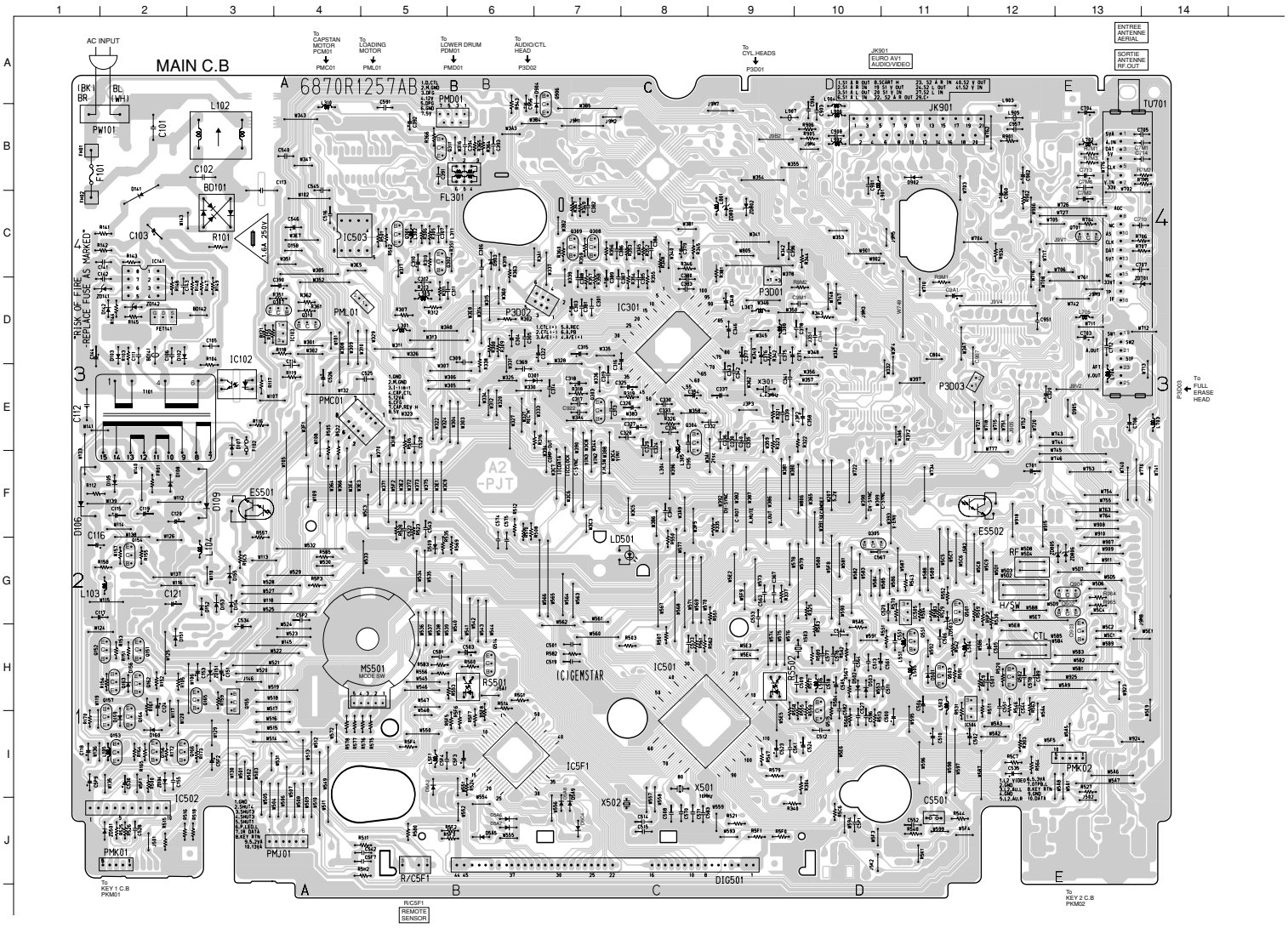

Downloaded from www.Manualslib.com manuals search engine

SCHEMATIC DIAGRAM-8 (KEY1 SECTION) <HV-FX7700/BA75>

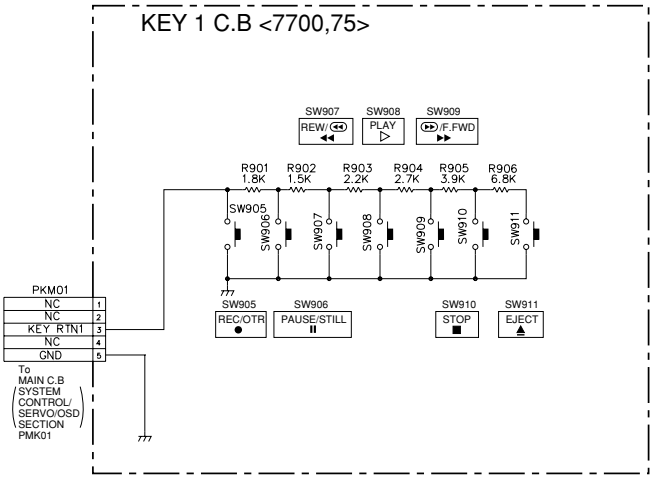

WIRING-3 (KEY1 C.B) <HV-FX7700/BA75>

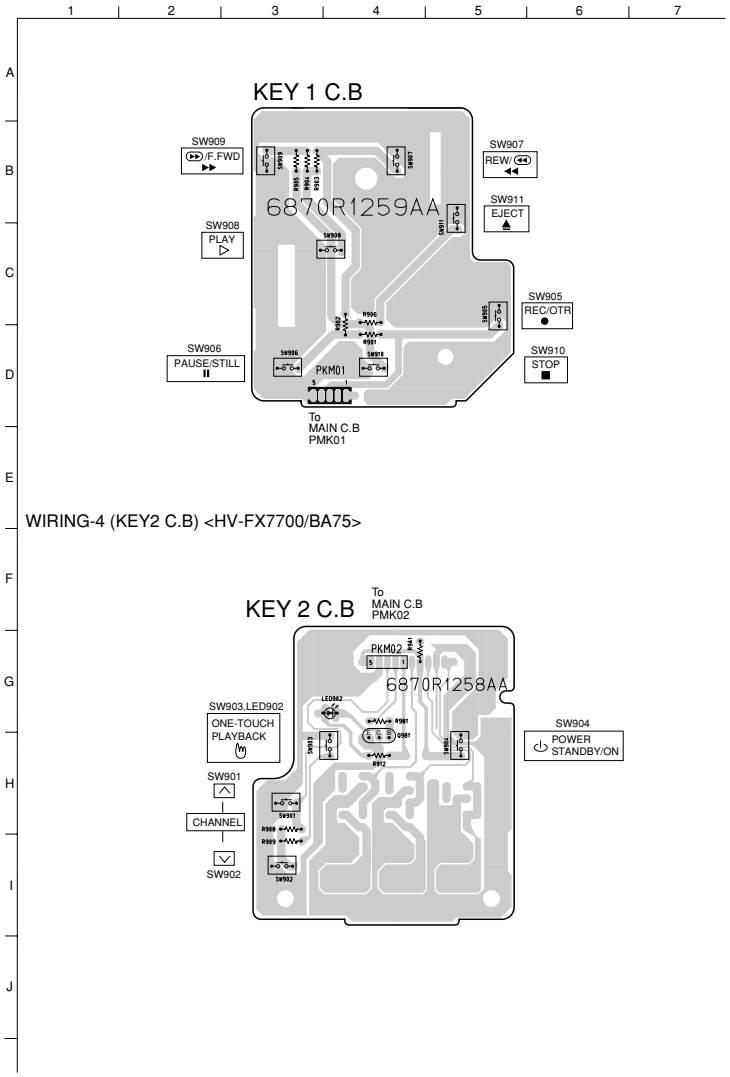

SCHEMATIC DIAGRAM-9 (KEY2 SECTION) <HV-FX7700/BA75>

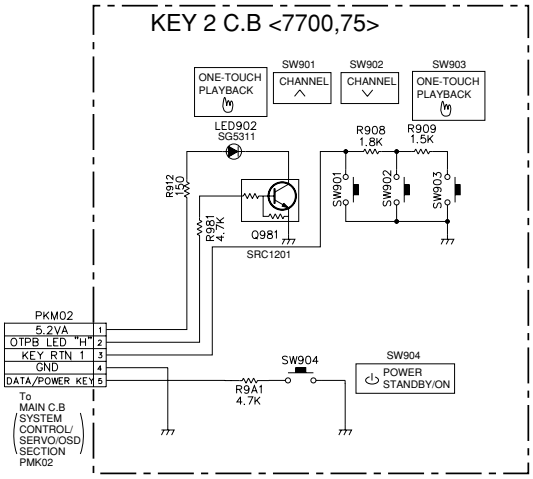

WIRING-4 (KEY2 C.B) <HV-FX7700/BA75>

Downloaded from www.Manualslib.com manuals search engine

SCHEMATIC DIAGRAM-10 (KEY1 SECTION) <HV-GX935>

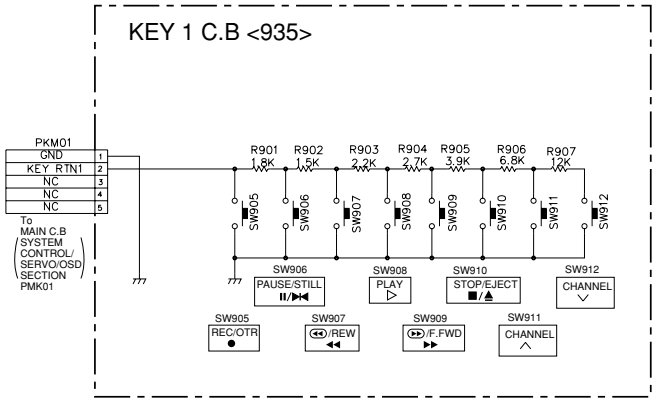

SCHEMATIC DIAGRAM-11 (KEY2 SECTION) <HV-GX935>

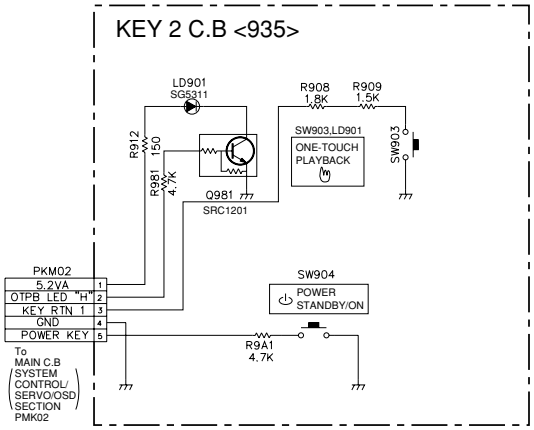

WIRING-5 (KEY1 C.B) <HV-GX935>

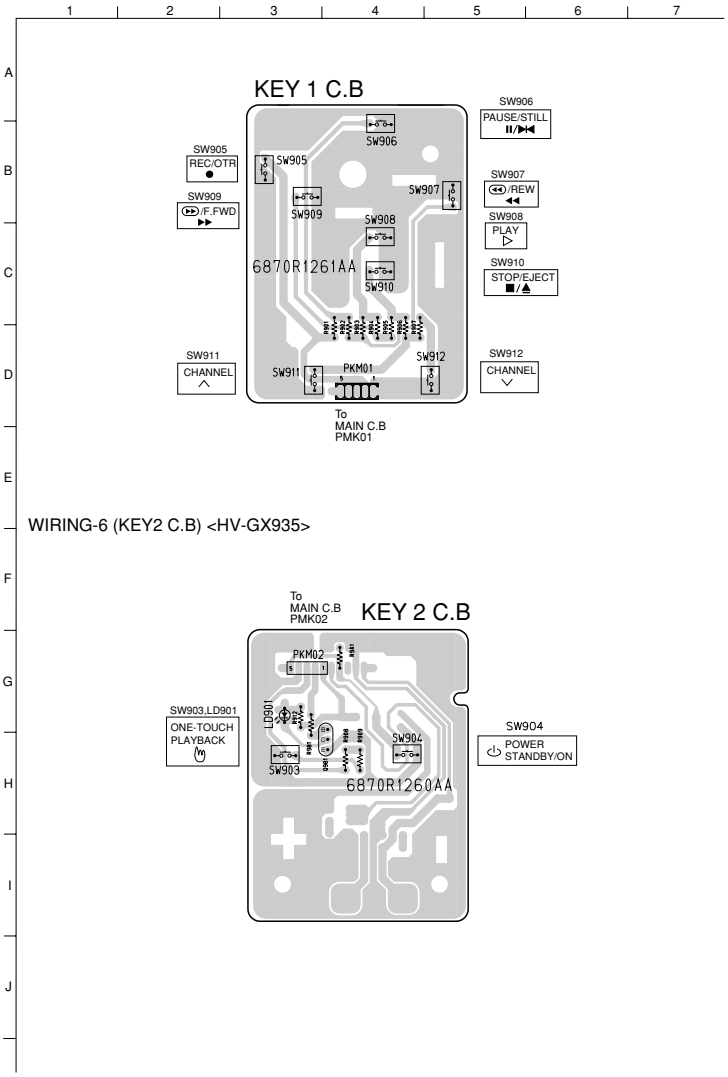

WIRING-6 (KEY2 C.B) <HV-GX935>

Downloaded from www.Manualslib.com manuals search engine

1 2 3 4 5 6 7

A B C D E F G H I J

NICAM C.B

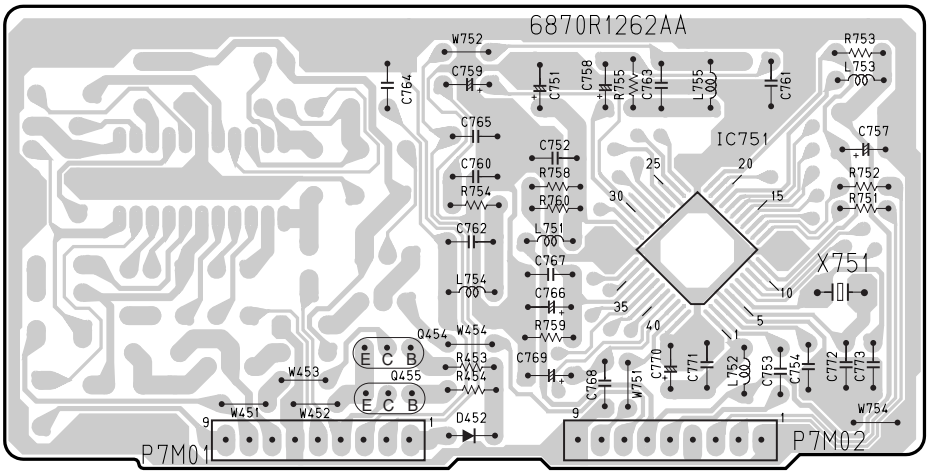

To
MAIN C.B
PM701

To
MAIN C.B
PM702

Downloaded from www.Manualslib.com manuals search engine

ADJUSTMENT

Test Equipment

- Oscilloscope
- AC Millivolt Meter
- Test Tape
  TTV-P1

Adjustment Location

MAIN C.B (TOP VIEW)

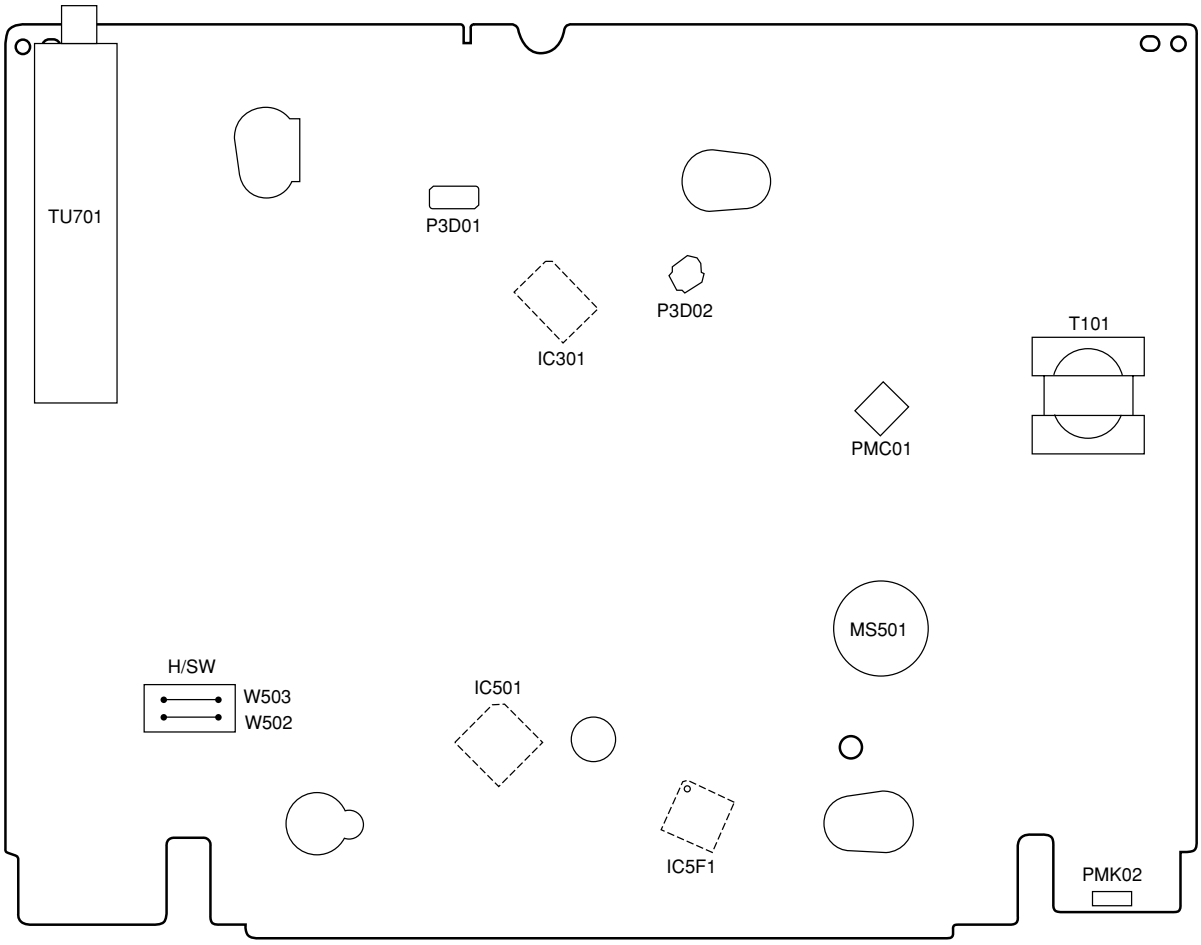

Downloaded from www.Manualslib.com manuals search engine

1. Servo Adjustment

1) PG Adjustment

MODE	MEASUREMENT POINT	ADJUSTMENT POINT	SPECIFICATION
PLAY (TTV-P1)	VIDEO OUT H/SW (W502, W503)	'PLAY' KEY (SET) + 'O' KEY (REMOCON)	6.5H ± 0.5H

- **Adjustment Procedure**

1. Insert the PAL SP Test Tape (TTV-P1) and play.
   Note - Adjust the distance of X, pressing the Tracking(+) or Tracking(-) when the “ATR” is blink after the PAL SP Test Tape is inserted.
2. Connect the CH1 of the oscilloscope to the H/SW (W502, W503) and CH2 to the Video Out for the VCR.
3. Trigger the mixed Video Signal of CH2 to the CH1 H.SW (W502, W503), and then check the distance (time difference), which is from the selected A(B) Head point of the H.SW(W502, W503) signal to the starting point of the vertical synchronized signal, to 6.5H ± 0.5H (416µs, 1H=64.0µs).

- **WAVEFORM**

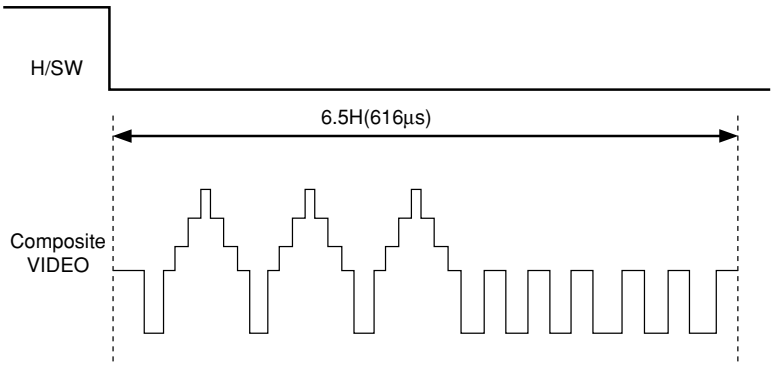

Downloaded from www.Manualslib.com manuals search engine

IC DESCRIPTION

IC, HD6432197X

Pin No.	Pin Name	I/O	Description
1	SVss	–	Servo Block GND
2	CTLref	O	Svcc/2 output, and CTL amp reference voltage input
3	CTL(+)	I/O	CTL(+) input/output
4	CTL(–)	I/O	CTL(-) input/output
5	CTL BIAS	I	CTL amp bias voltage
6	CTL FB	I	CTL feedback SW control
7	CTL AMP (O)	O	CTL primary amp output
8	CTL SMT(I)	I	CTL Schmitt amp input
9	CFG	I	CFG input
10	SVcc	–	Servo Block power supply (+5V)
11	AFCpc	I/O	For the connection of AFC “C” of sync separator
12	AFCosc	I/O	Generates AFC of sync separator
13	AFCLPF	I/O	LPF of sync separator
14	C_SYNC	I/O	C. SYNC input
15	VLPF/VSYNC	I	Capacitor connection GND
16	Cvin2	I	Video signal input for NTSC captions slicer
17	Cvin1	I	Video signal input for OSD
18	OSD Vcc	–	OSD Block power supply (+5V)
19	CVout	O	Video signal output
20	OSD_VSS	I	OSD Block GND
21	4/2FscOUT	O	For the connection of subcarrier oscillator
22	4/2FscIN	I	For the connection of subcarrier oscillator, S/W selectable
23	AVss	–	A/D Block GND
24	V.ENV	I	Video envelope input
25	A.ENV	I	HiFi envelope input
26	PG ADJ	I	For PG delay adjustment
27	AFT	I	AFT +/- input for tuner
28	KEY0	I	Key Return 0
29	KEY1	I	Key Return 1
30	N.C	–	Not connected
31	A. LEVEL (L)	I	Audio (L) input to drive level meter
32	A. LEVEL (R)	I	Audio (R) input to drive level meter
33	SECAM DET 'H'	I	SECAM discrimination signal input
34	C+ DETECT	I	C+ & 2nd pass 16:9 detector
35	N.C	–	Not connected
36	A/D Vcc	–	A/D Block power supply
37	P.FAIL	I	Power failure input
38	PWR KEY	O	Output to eliminate noise interfering with blue background signal
39	CSYNC_IN	I	SYNC input to detect whether signal is present
40	A.MUTE 'H'	O	Output to control audio muting
41	S2V.IN 'H'	O	Output to switch the input selector
42	SE/MESECAM 'H'	I/O	“H” is input from Y/C in SECAM/MESECAM mode.

Downloaded from www.Manualslib.com manuals search engine

Pin No.	Pin Name	I/O	Description
43	R/C IN	I	Remote input
44	S Canal	I/O	C + & 2nd pass 16 : 9 detector
45	N.C	–	Not connected
46	VCR 'H'	O	TV/VCR control output
47	REC 'H'	O	Recording current control output
48	OSD 'H'	O	OSD color control in YC SECAM/MESECAM mode
49	T/UP REEL	I	Take-up reel input
50	CAP. REC 'H'	O	Capstan forward/reverse control output
51	TOP SENSOR	I	Top sensor input
52	SEARCH 'H'	O	Capstan Vcc control output
53	PLUS2 DATA	O	VCR Plus+ II control code output
54	R. FINDER	O	Remote control finder output control
55	R/FIND MUTE 'L'	I/O	Remote control finder muting control
56	MAIN VCC	–	Micom power supply
57	MAIN VSS	–	Micom GND
58	HSR 'H'	I/O	Capstan Vcc control output
59	IIC CLK	O	IIC control clock pin
60	IIC DATA	I/O	IIC control data pin
61	TIMER 'H'	O	Power switch for VPS check during power off
62	P. CTL 'H'	O	VCR main power control output
63	FLD CLK	O	FLD control clock output
64	FLD DATA MS	O	FLD data output to Micom
65	FLD DATA SM	I	Micom data input from FLD
66	FLD ENA	O	FLD enable output
67	STAND BY 'H'	O	3W mode control output (FLD power off)
68	MODE SW 4	I	MD/SW4 input
69	MODE SW 3	I	MD/SW3 input
70	MODE SW 2	I	MD/SW2 input
71	MODE SW 1	I	MD/SW1 input
72	LD (–)	O	Loading motor drive (-)
73	LD (+)	O	Loading motor drive (+)
74	FWE	I	Flash memory write designation pin: Open for mask product
75	X2 (32.768kHz/OUT)	O	For the connection of 32.768 kHz OSC
76	X1 (32.768kHz/IN)	I	For the connection of 32.768 kHz OSC
77	$\overline{\text{RES}}$	I	Micom reset pin (“L” active)
78	OSC1 (IN)	I	For the connection of 10 MHz OSC
79	Vss	–	Micom GND
80	OSC2 (OUT)	O	For the connection of 10 MHz OSC
81	VCL	I	For the connection of capacitor to stabilize power supply (capacitor connected to Vss)
82	MDO	I	Designates advanced mode, coupled at “H”
83	D. ADJ	I/O	Drum control output during slow

Downloaded from www.Manualslib.com manuals search engine

Pin No.	Pin Name	I/O	Description
84	CAP ACCEL	I/O	Capstan control output during slow
85	I-LIMIT	I/O	Output to control capstan current
86	S. MONITOR2	O	Servo monitor 2
87	S. MONITOR1	O	Servo monitor 1
88	CST SW	I	CST SW/REC Tab input
89	RX	I	AV link data input
90	TX	O	AV link data output
91	BBE 'L'	O	BBE: AIWA RGB PATH: AKAI
92	SUP. REEL	I	Supply reel input
93	TU. SEC VL 'H'	O	Tuner SECAM VHF-L band switching control
94	TU. SEC 'H'	O	Tuner SECAM mode control
95	END SENSOR	I	End sensor input
96	LP REC MUTE 'H'	O	Hi-Fi audio is muted during LP recording
97	16:9 'H'	O	TV 16:9 mode control
98	SCART 'H'	O	TV audio line mode switching
99	C. ROT	I/O	Color rotary SW signal output
100	H. AMP SW	I/O	Head amp SW output
101	COMP IN	I/O	Comparator input
102	CTL GAIN ADJ	I/O	CTL siganl Gain control
103	DPG	I	DPG input
104	DFG	I	DFG input
105	V.H/SW	O	V.HD/SW output
106	A.H/SW	O	A.HD/SW output
107	DRUM PWM	O	Drum PWM control
108	CAP.PWM	O	Capstan PWM control
109	DV. SYNC	O	DVSYNC output
110	VSS	–	Micom GND
111	C.SYNC IN	I	C.SYNC input for sync separator
112	VCC	–	Micom power supply

Downloaded from www.Manualslib.com manuals search engine

IC, µPD16311GC-AB6

Pin No.	Pin Name	I/O	Description
1 ~ 4	SHTL1 ~SHTL4	I	4-bit general-purpose input pins
5	DATA OUT	O	Serial data output. Lower bits are first output synchronized with the trailing edge of shift clock. (The output is Nch open drain.)
6	DATA IN	I	Serial data input. Lower bits are first input synchronized with the leading edge of shift clock.
7	IC	–	Must always be set to open (set to VDD voltage)
8	CLOCK	I	Serial data is input at the leading edge, and data is output at the trailing edge.
9	FLD ENV		The leading or trailing edge initializes the serial I/F to stand by for receiving a command. The data input after the STB trailing edge is processed as a command. When command or data is being processed, the processing is interrupted and the serial I/F is initialized. When STB is “H”, CLK is ignored.
10	KEY1	I	Data input to these pins is latched in the final stage of display cycle.
11	KEY2	I	
12	KEY3	I	
13	KEY4	I	
14	Vdd	–	5 V ± 10%
15 ~ 26	P1 ~ P12	O	Exclusively used for segment outputs
27 ~ 32	P13 ~ P16	O	Segment/grid outputs swicthable
33	Vdd	–	5 V ± 10%
34	Vcc	–	Vdd – 35 V MAX.
35	NC		Not connected
36 ~ 44	G1 ~ G9	O	Exclusively used for grid outputs
45	Vdd	–	5 V ± 10%
46 ~ 48	NC	O	Not connected
49	OTPB LED 'H'	O	OTPB LED Driver (OTPB mode “H”)
50	NC	O	Not connected
51	Vss	–	Connected to system ground
52	OSC	–	For the connection of resistors that determine the oscillation frequency

Downloaded from www.Manualslib.com manuals search engine

MECHANICAL EXPLODED VIEW 1/1

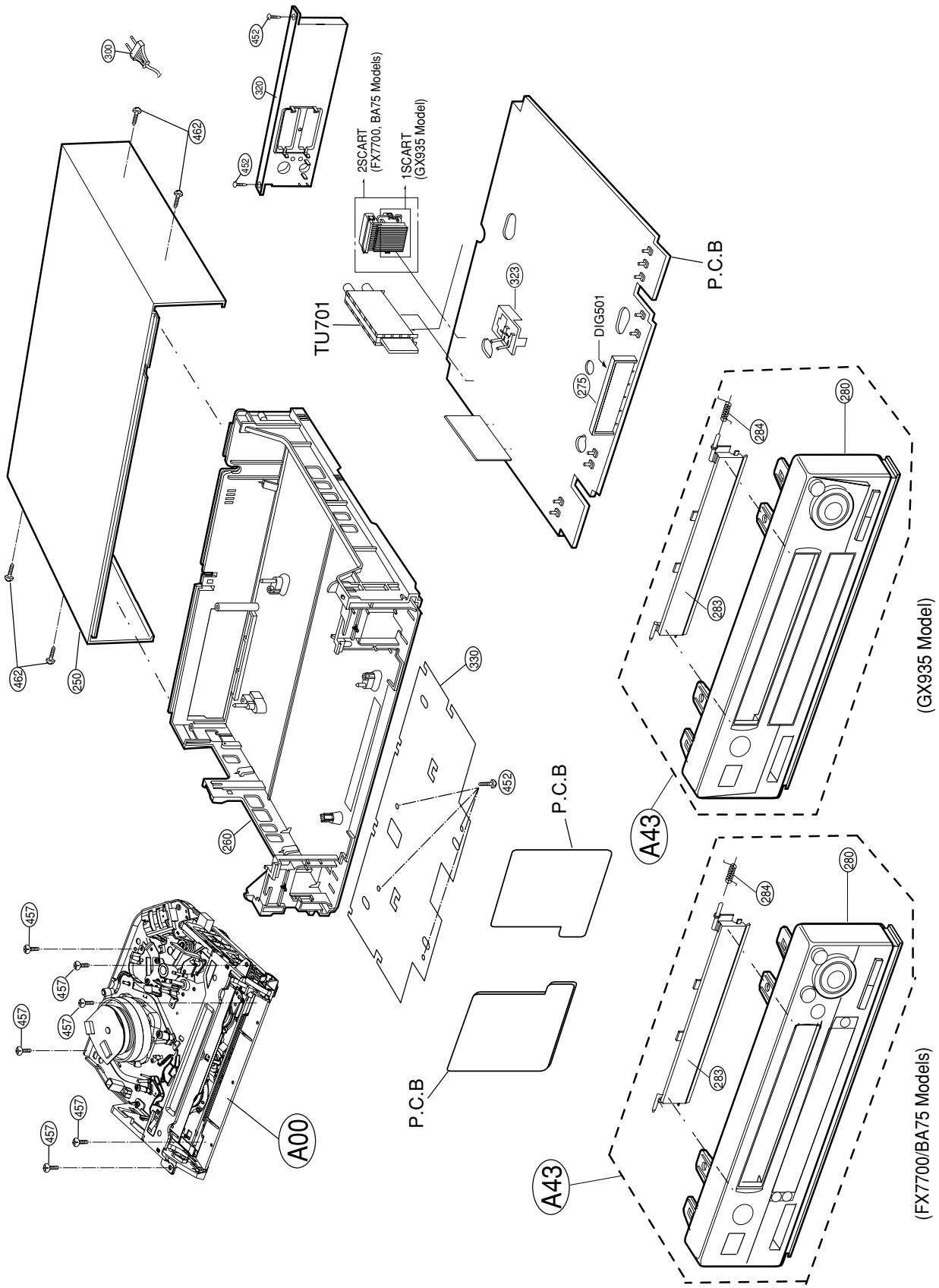

Downloaded from www.Manualslib.com manuals search engine

MECHANICAL MAIN PARTS LIST 1/1

DESCRIPTIONで判断できない物は "REFERENCE NAME LIST" を参照してください。
If can't understand for Description please kindly refer to "REFERENCE NAME LIST".

REF. NO	PART NO.	KANRI NO.	DESCRIPTION
250	S1-10R-012-8U0		CASE,TOP
260	———		FRAME,MAIN
275	S9-30R-013-3A0		HOLDER DIGITRON<93>
275	S9-30R-013-3B0		HOLDER DIGITRON<75,77>
280	———		PANEL FRONT(BFA203P)<93>
280	———		PANEL FRONT(7700K)<75,77>
283	S5-80R-003-3N0		DOOR CST(BFA203P)<93>
283	S5-80R-V00-1C0		DOOR CST(7700Z)<75,77>
284	S4-426-81A-000		SPR,DOOR
⚠ 300	S4-10R-CHD-01A		POWER CORD
320	S7-20R-D02-0A0		PANEL DISTRIBUTOR(PAL-1SCART)<93>
320	S7-20R-D02-0C0		PANEL DISTRIBUTOR(PAL-2SCART<75,77>
323	S1-11R-008-9B0		CASE ASSY
330	S5-50R-021-0A0		COVER BOTTOM
452	S3-530-51A-000		SCREW,SPECIAL
457	87-741-097-410		SCREW,3-12
462	S3-531-36A-000		SCREW,SPECIAL(FBK)
A00	———		DECK ASSY,D33K(2HD,PAL,VCR)<93>
A00	———		DECK ASSY,D33K(4HF, PAL)<75,77>
A43	S7-21R-F09-5D0		PANEL ASSY,FRONT BFA203P<93>
A43	S7-21R-F13-5C0		PANEL ASSY,FRONT(7700Z)<77>
A43	S7-21R-F13-5M0		PANEL ASSY,FRONT(BA75Z)<75>

TYPE	MODEL NAME	SUFFIX
<77>	HV-FX7700	Z
<75>	HV-BA75	Z
<93>	HV-GX935	Z

COLOR NAME TABLE

Basic color symbol	Color	Basic color symbol	Color	Basic color symbol	Color
B	Black	C	Cream	D	Orange
G	Green	H	Gray	L	Blue
LT	Transparent Blue	N	Gold	P	Pink
R	Red	S	Silver	ST	Titan Silver
T	Brown	V	Violet	W	White
WT	Transparent White	Y	Yellow	YT	Transparent Yellow
LM	Metallic Blue	LL	Light Blue	GT	Transparent Green
LD	Dark Blue	DT	Transparent Orange	GM	Metallic Green
YM	Metallic Yellow	DM	Metallic Orange	PT	Transparent Pink

Downloaded from www.Manualslib.com manuals search engine

MECHANISM EXPLODED VIEW 1/3

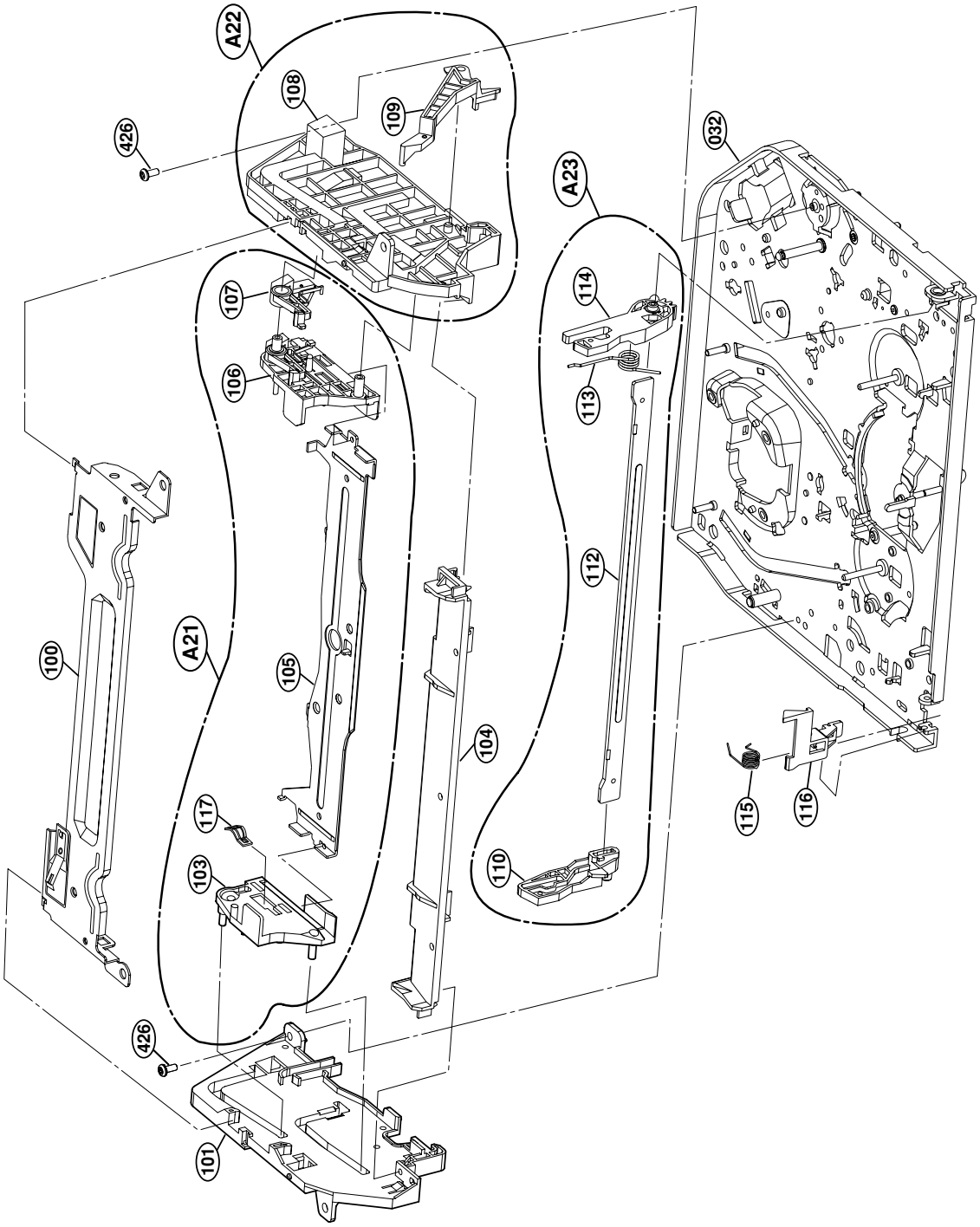

Downloaded from www.Manualslib.com manuals search engine

MECHANISM MAIN PARTS LIST 1/3

DESCRIPTIONで判断できない物は "REFERENCE NAME LIST" を参照してください。
If can't understand for Description please kindly refer to "REFERENCE NAME LIST".

REF. NO	PART NO.	KANRI NO.	DESCRIPTION
032	S1-41R-000-2B0		CHASSIS ASSY D33
100	S3-01R-003-2A0		PLATE ASSY TOP
101	S8-10R-006-8A0		BRACKET SIDE(L)
103	——		HOLDER SIDE(L)
104	S9-74R-001-9A0		GUIDE CST
105	——		HOLDER CST
106	——		HOLDER SIDE(R)
107	——		LEVER STOPPER(R)
108	——		BRACKET SIDE(R)
109	——		OPENER DOOR
110	——		ARM,F/L (L)
112	——		BODY F/L
113	——		SPRING F/L(R)
114	——		ARM F/L(R)
115	S9-70R-005-0A0		SPRING SWITCH
116	S5-10R-002-0A0		LEVER SWITCH
117	——		SPR,PLATE
426	87-261-094-410		PAN HEAD SCREW 3-6
A21	S9-31R-003-1A0		HOLDER ASSY
A22	S8-11R-001-8A0		BRACKET ASSY DOOR
A23	S2-61R-001-6A0		ARM ASSY F/L

TYPE	MODEL NAME	SUFFIX
<77>	HV-FX7700	Z
<75>	HV-BA75	Z
<93>	HV-GX935	Z

Downloaded from www.Manualslib.com manuals search engine

MECHANISM EXPLODED VIEW 2/3

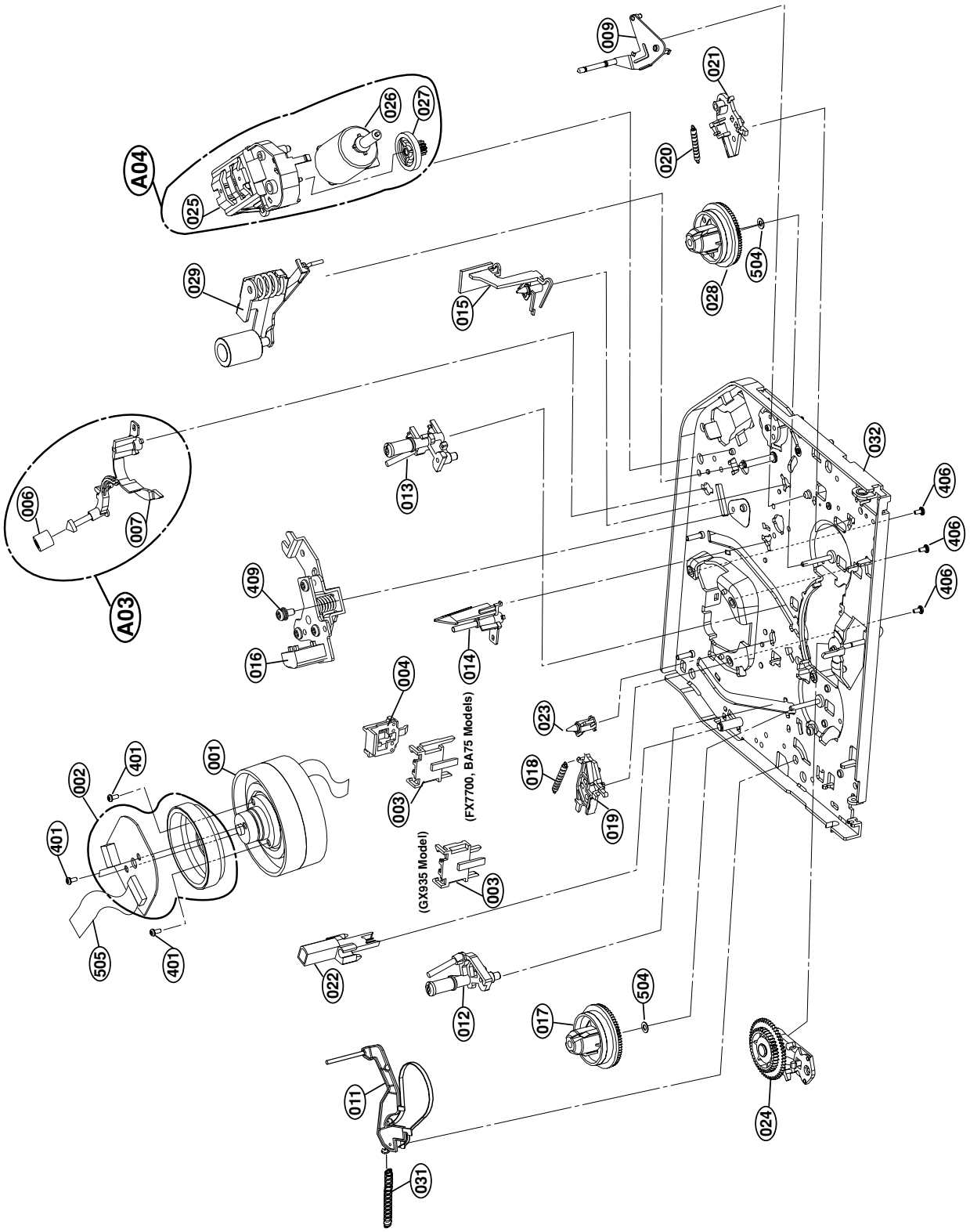

Downloaded from www.Manualslib.com manuals search engine

MECHANISM MAIN PARTS LIST 2/3

DESCRIPTIONで判断できない物は "REFERENCE NAME LIST" を参照してください。
If can't understand for Description please kindly refer to "REFERENCE NAME LIST".

REF. NO	PART NO.	KANRI NO.	DESCRIPTION
001	S7-23R-010-4A0		DRUM ASSY SUB D33-2CH<93>
001	S7-23R-010-6D0		DRUM ASSY SUB D33-6CH<75,77>
001	S8-50R-HG2-2Z0		CABLE,FLAT UL2896
001	——		SPR,BATT-B(N2)
002	S6-80R-B00-04B		MOTOR(MECH)DRUM
003	S9-30R-010-6A0		HOLDER FPC<93>
003	S9-30R-010-8A0		HOLDER FPC(6CH)<75,77>
004	S0-06R-002-0A0		CAP,FPC
006	——		ROLLER CLEANER
007	——		ARM CLEANER
009	S2-61R-001-7A0		ARM ASSY T/UP(D-33K)
011	S2-61R-001-8A0		ARM ASSY TENSION (D-33K)
012	S0-41R-000-3A0		BASE ASSY P2
013	S0-41R-000-4A0		BASE ASSY P3
014	S0-41R-000-7A0		BASE ASSY P4
015	S8-70R-000-3A0		OPENER LID
016	S0-41R-000-5F0		BASE ASS A/C HEAD
017	S4-08R-000-1B0		REEL S
018	S9-70R-005-4A0		SPRING SB
019	S4-21R-000-3A0		BRAKE ASSY S
020	S9-70R-005-3A0		SPRING TB
021	S4-21R-000-4A0		BRAKE ASSY T
022	S5-238-33B-000		HEAD FE D33
023	S9-80R-001-0A0		SUPPORTER CST
024	S2-61R-001-3A0		ARM ASSY IDLER
025	——		BRACKET L/D MOTOR
026	——		MOTOR ASSY L/D
027	S4-70R-002-5A0		GEAR WHEEL
028	S4-08R-000-2B0		REEL T
029	S2-61R-001-1B0		PINCH ARM ASSY
031	S9-70R-006-9A0		SPRING TENSION
401	SM-PC0-261-418		SCREW,2.6-4.0
406	87-261-094-410		PAN HEAD SCREW 3-6
409	87-741-095-410		SCREW,PAN HEAD 3.0-8.0
504	S3-540-01B-000		WASHER,P.S 3.1-6-0.5
505	S8-790-19K-000		FFC,7P
A01	——		DRUM ASSY D33 2CH<93>
A01	——		DRUM ASSY D33-6CH<75,77>
A03	S2-61R-001-5A0		CLEANER ARM ASSY
A04	S8-11R-001-9A0		BRACKET ASSY L/D MOTOR

TYPE	MODEL NAME	SUFFIX
<77>	HV-FX7700	Z
<75>	HV-BA75	Z
<93>	HV-GX935	Z

Downloaded from www.Manualslib.com manuals search engine

MECHANISM EXPLODED VIEW 3/3

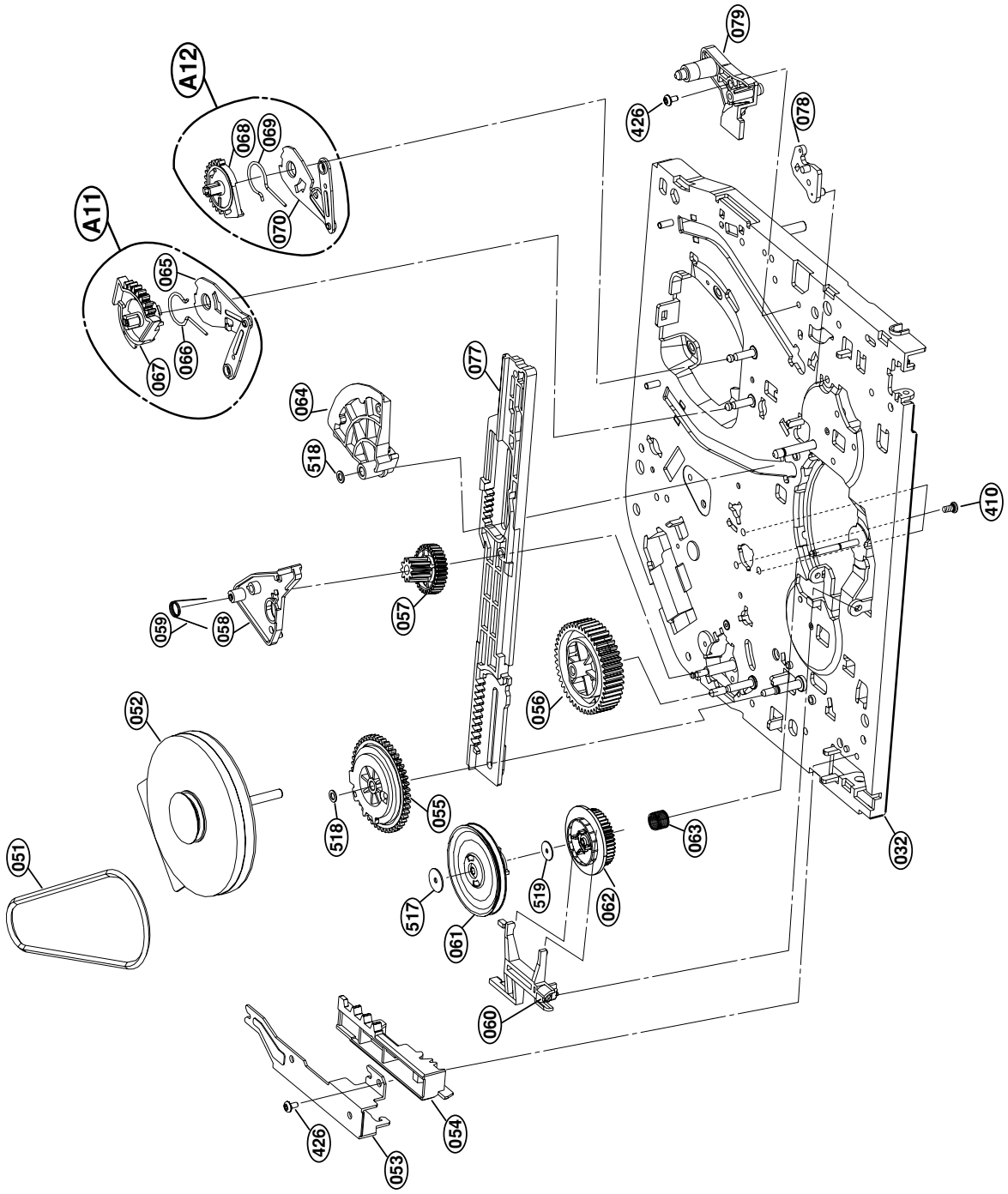

Downloaded from www.Manualslib.com manuals search engine

MECHANISM MAIN PARTS LIST 3/3

DESCRIPTIONで判断できない物は "REFERENCE NAME LIST" を参照してください。
If can't understand for Description please kindly refer to "REFERENCE NAME LIST".

REF. NO	PART NO.	KANRI NO.	DESCRIPTION
032	S1-41R-000-2B0		CHASSIS ASSY D33
051	S4-00R-000-5A0		BELT CAPSTAN
052	S6-80R-A00-03A		MOTOR(MECH)
053	S9-74R-001-8A0		GUIDE RACK F/L
054	S4-70R-003-7A0		GEAR RACK F/L
055	S4-70R-003-3A0		GEAR DRIVE
056	S4-70R-003-2B0		GEAR,CAM
057	S4-70R-003-6B0		GEAR CONNECT
058	S4-20R-000-5A0		BRAKE CAPSTAN
059	S9-70R-005-9A0		SPRING CAPSTAN
060	S5-10R-002-5B0		F/R LEVER
061	S2-65R-000-3A0		CLUTCH ASSY D33K
062	S4-70R-005-8A0		GEAR,UP/D33K
063	S9-70R-005-1A0		SPRING UP/D
064	S4-70R-003-4A0		GEAR SECTOR
065	——		LEVER P3
066	——		SPRING L/D
067	——		GEAR P3
068	——		GEAR P2
069	——		SPRING L/D
070	——		LEVER P2
077	S3-00R-015-7A0		PLATE SLIDER
078	S5-10R-002-2A0		LEVER TENSION
079	S0-40R-002-1A0		BASE,TENSION(D-33K)
410	SA-PF0-262-218		SCREW,PAN HEAD 2.6-6.8
426	87-261-094-410		PAN HEAD SCREW 3-6
517	SW-ZZR-000-4B0		WASHER STOPPER
518	SW-ZZR-000-4A0		WASHER STOPPER
519	SW-ZZR-000-4D0		WASHER STOPPER<75,77>
A11	S4-70R-002-8A0		GEAR ASSY P3
A12	S4-70R-002-6A0		GEAR ASSY P2

TYPE	MODEL NAME	SUFFIX
<77>	HV-FX7700	Z
<75>	HV-BA75	Z
<93>	HV-GX935	Z

Downloaded from www.Manualslib.com manuals search engine

DECK MECHANISM PARTS LOCATIONS

• Top View

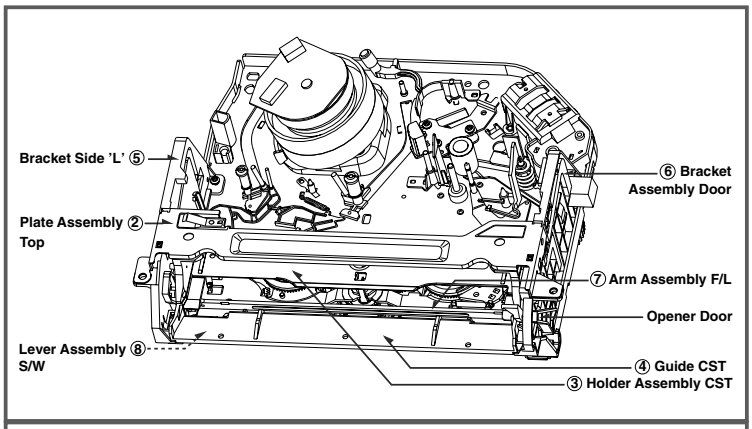

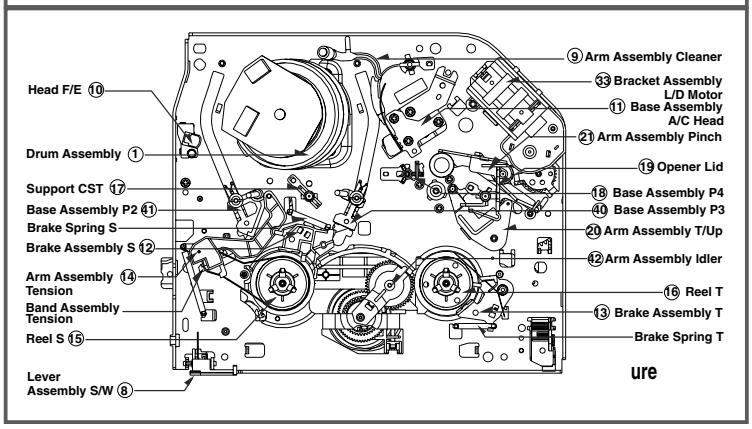

ure

Starting No. \ Pracedure		Part	Fixing Type	Fig-ure
	1	Drum Assembly	3 Screws , Cap FPC	A-1
	2	Plate Assembly Top	Two Hooks	A-2
2	3	Holder Assembly CST	Chassis Hole	A-2
	4	Guide CST	2 Hooks	A-2
2,3,4	5	Bracket Side (L)	1 Screw	A-2
2,3,4	6	Bracket Assembly Door	1 Screw	A-2
2,3,4,5,6	7	Arm Assembly F/L	Chassis Hole	A-2
2,3,4,5	8	Lever Assembly S/W	Chassis Hole	A-2
	9	Arm Assembly Cleaner	Chassis Embossing	A-3
	10	Head F/E	2 Hooks	A-3
	11	Base Assembly A/C Head	1 Screw	A-3
	12	Brake Assembly S	Chassis Hole	A-4
2,3	13	Brake Assembly T	Chassis Hole	A-4
2,3,12,	14	Arm Assembly Tension	Chassis Hole	A-4
2,3,12,14	15	Reel S	Chassis Shaft	A-4
2,3,13	16	Reel T	Chassis Shaft	A-4
	17	Support CST	Chassis Embossing	A-5
	18	Base Assembly P4	Chassis Embossing	A-5
	19	Opener Lid	Chassis Embossing	A-5
19	20	Arm Assembly T/Up	Chassis Embossing	A-5
19	21	Arm Assembly Pinch	Chassis Shaft	A-5

• Bottom View

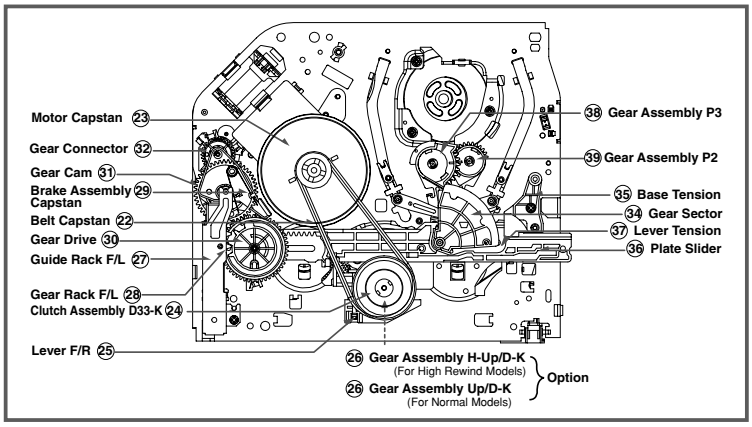

NOTE : When reassembly perform the procedure in the reverse order.

1) When reassembling, confirm Mechanism and Mode Switch Alignment Position (Refer to Page 79)
2) When disassembling, the Parts for Starting No. Should be removed first.

Starting No. \ Pracedure		Part	Fixing Type	Fig-
	22	Belt Capstan		A-6
22	23	Motor Capstan	3 Screws	A-6
	24	Clutch Assembly D33-K	1 Washer	A-6
22,24	25	Lever F/R	1 Hook	A-6
22,24	26	Gear H-Up/D-K	2 Washers	A-6
	27	Guide Rack F/L	1Screw	A-7
27	28	Gear Rack F/L		A-7
27, 28	29	Brake Assembly Capstan	Chassis Shaft	A-7
27, 28	30	Gear Drive	1 Washer	A-8
27, 28, 29	31	Gear Cam	Chassis Shaft	A-8
27, 28, 29, 30	32	Gear Connector	Chassis Shaft	A-8
	33	Bracket Assembly L/D Motor	3 Hooks	A-8
	34	Gear Sector	3 Washers	A-9
	35	BaseTension	1 Screw	A-9
22, 24, 25, 27, 28, 30, 34 35	36	Plate Slider	Chassis Shaft	A-9
22, 24, 25, 27, 28, 30, 34 35	37	Lever Tension	Chassis Hole	A-9
34	38	Gear Assembly P3	2 Hooks	A-10
34, 38	39	Gear Assembly P2	2 Hooks	A-10
34, 38, 39	40	Base Assembly P3	Chassis Hole	A-10
34, 38, 39, 40	41	Base Assembly P2	Chassis Hole	A-10
1, 2	42	Arm Assembly Idler	1 Hook	A-10

Downloaded from www.Manualslib.com manuals search engine

DECK MECHANISM DISASSEMBLY

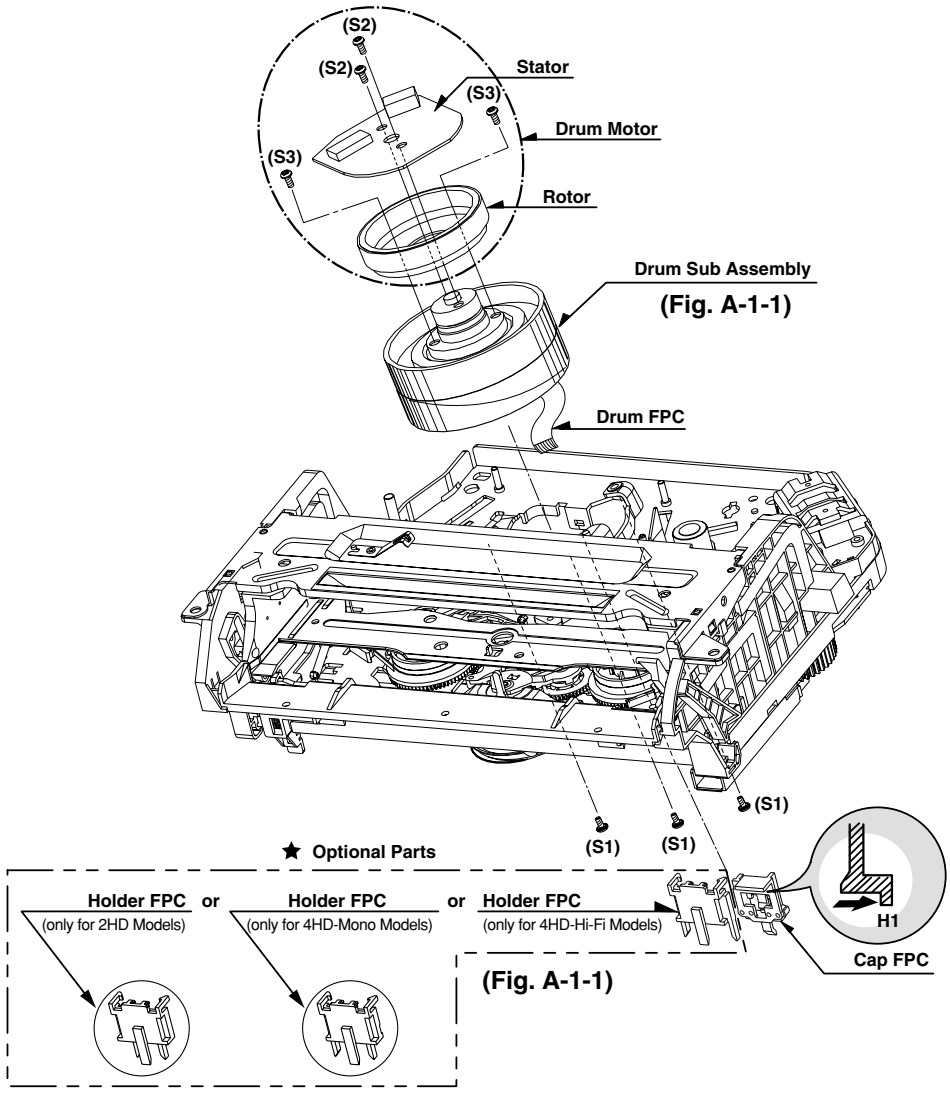

Fig. A-1

1. Drum Assembly (Fig. A-1-1)

1) Unhook the (H1) on the back side of the Chassis and separate the Cap FPC.
2) Remove three Screws (S1) and lift up the Drum Assembly.
3) Remove two Screws (S2) and Separate the Stator of Drum Motor.
4) Remove two Screws (S3) and Separate the Rotor of Drum Motor from the Drum Sub Assembly.

NOTE

(1) When reassembling Cap FPC, two Holes of Drum FPC are inserted to the two Bosses of Holder FPC correctly. (Refer to Fig. B-1)

(Fig. B-1)

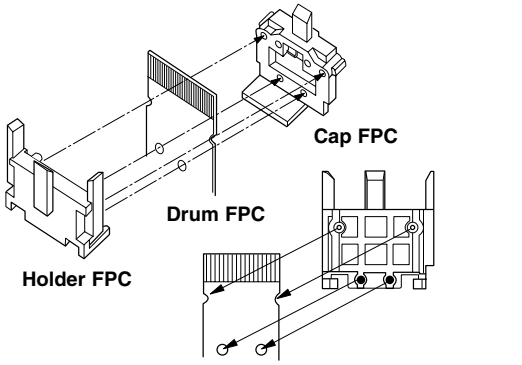

Downloaded from www.Manualslib.com manuals search engine

DECK MECHANISM DISASSEMBLY

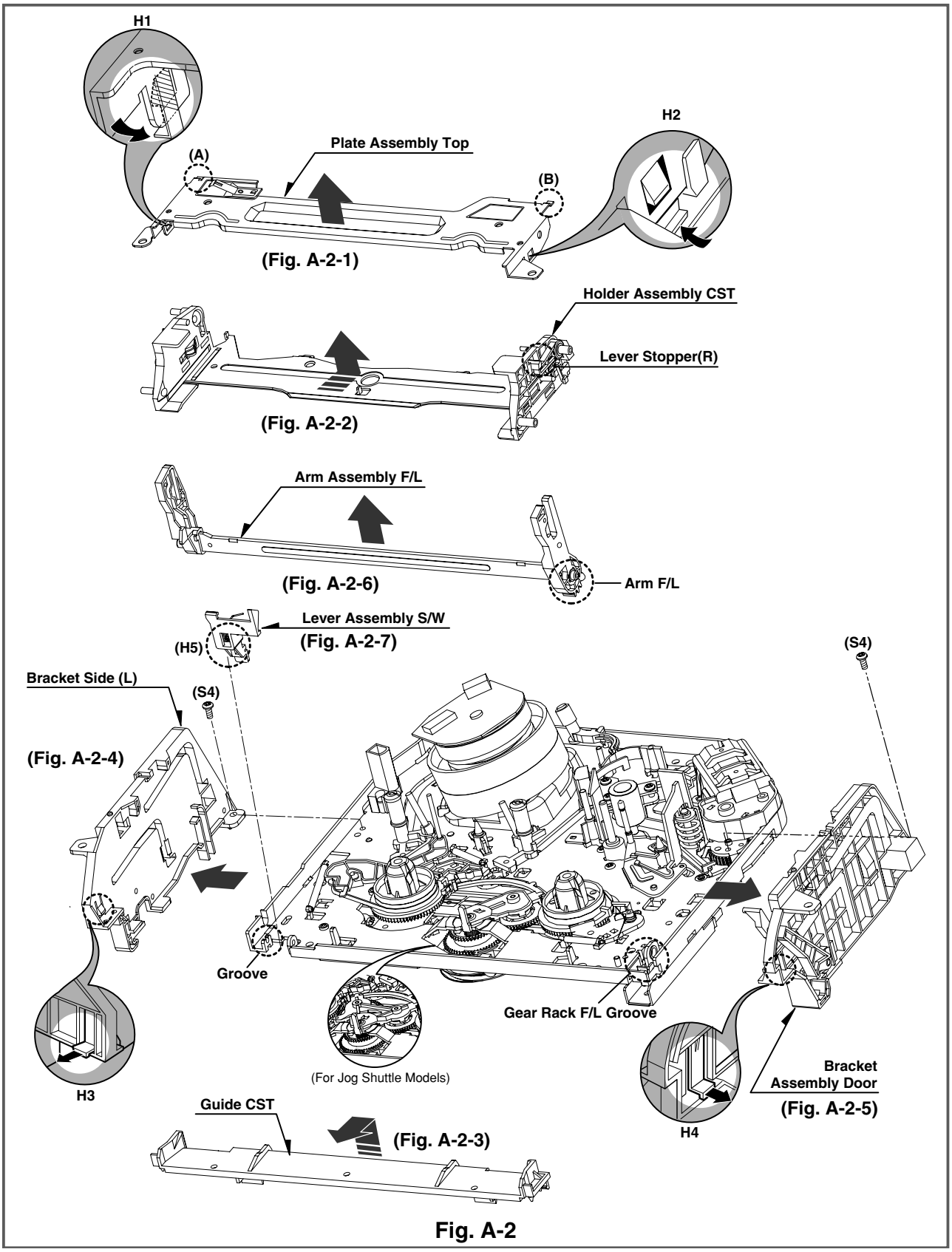

Fig. A-2

Downloaded from www.Manualslib.com manuals search engine

DECK MECHANISM DISASSEMBLY

2. Plate Assembly Top (Fig. A-2-1)

1) Unhook the (H1) and separate the Left Side.
2) Unhook the (H2) and lift up the Plate Assembly Top.

NOTE

(1) When reassembling, confirm (A),(B) Part of the Plate Assembly Top is inserted to the (L),(R) Grooves of the Bracket Side(L) and Bracket Assembly Door.

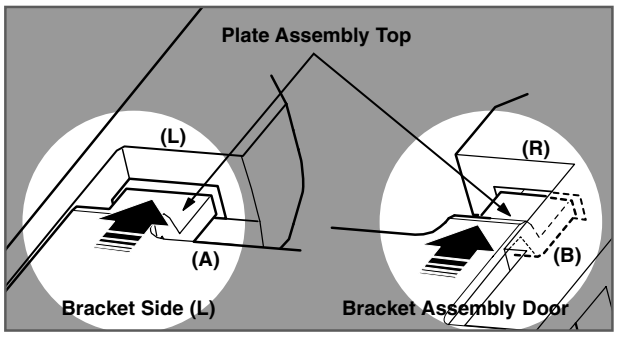

3. Holder Assembly CST (Fig.A-2-2)

1) Push the Lever Stopper (R) in the direction of the arrows (A) and move the Holder Assembly CST.

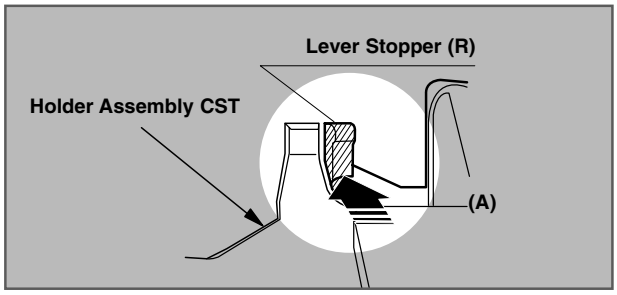

2) Push the Bracket Assembly Door to the right and lift up the Holder Assembly CST along the Guide Groove of the Bracket Assembly Door.

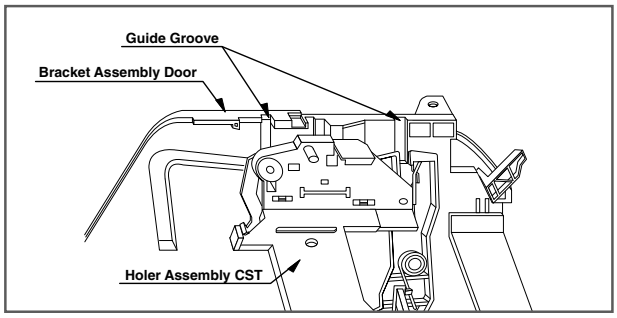

4. Guide CST (Fig.A-2-3)

1) Unhook(H3) in the direction of the arrow and separate the left side.
2) Unhook (H4) as above No.1) and disassemble the Guide CST in the direction of the arrow.

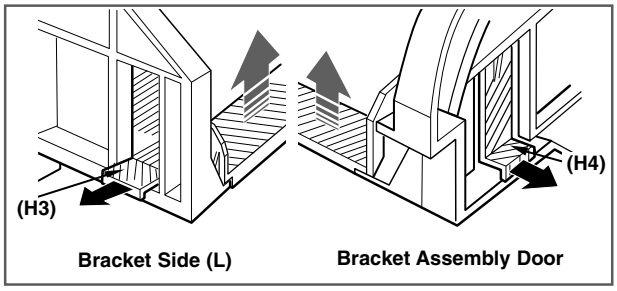

5. Bracket Side(L) (Fig. A-2-4)/ Bracket Assembly Door (Fig.A-2-5)

1) Remove the Screw (S4) and disassemble the Bracket Side(L) in the front.
2) Remove the Screw (S4) and disassemble the Bracket Assembly Door in the front.

6. Arm Assembly F/L (Fig. A-2-6)

1) Push the Arm Assembly F/L to the left and lift up it.

NOTE

(1) When reassembling, confirm that the Gear(A) of the Arm F/L and the Gear(B) of the Gear Rack F/L are assembled as below.

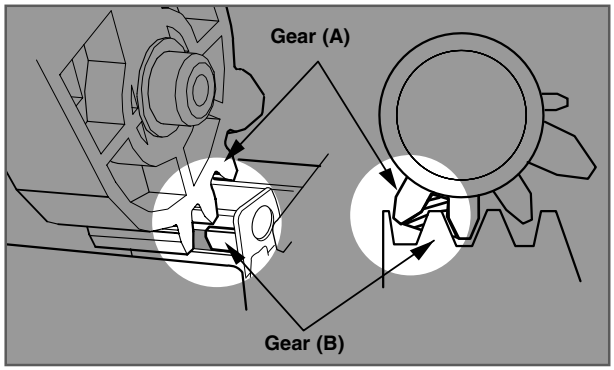

7. Lever Assembly S/W (Fig. A-2-7)

1) Hook the Spring Lever S/W on (H5).
2) Lift up the left side of the Lever S/W from the Groove(A) of the Chassis.

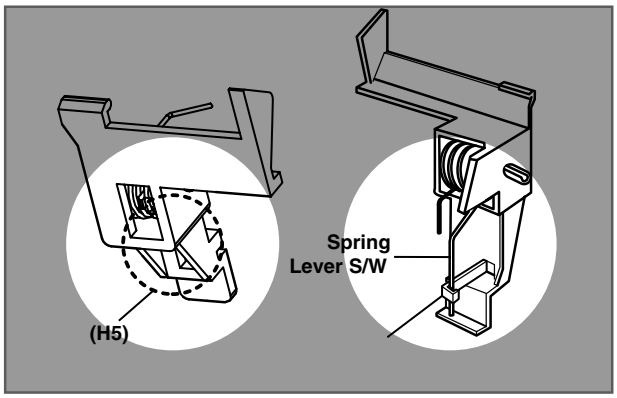

Downloaded from www.Manualslib.com manuals search engine

DECK MECHANISM DISASSEMBLY

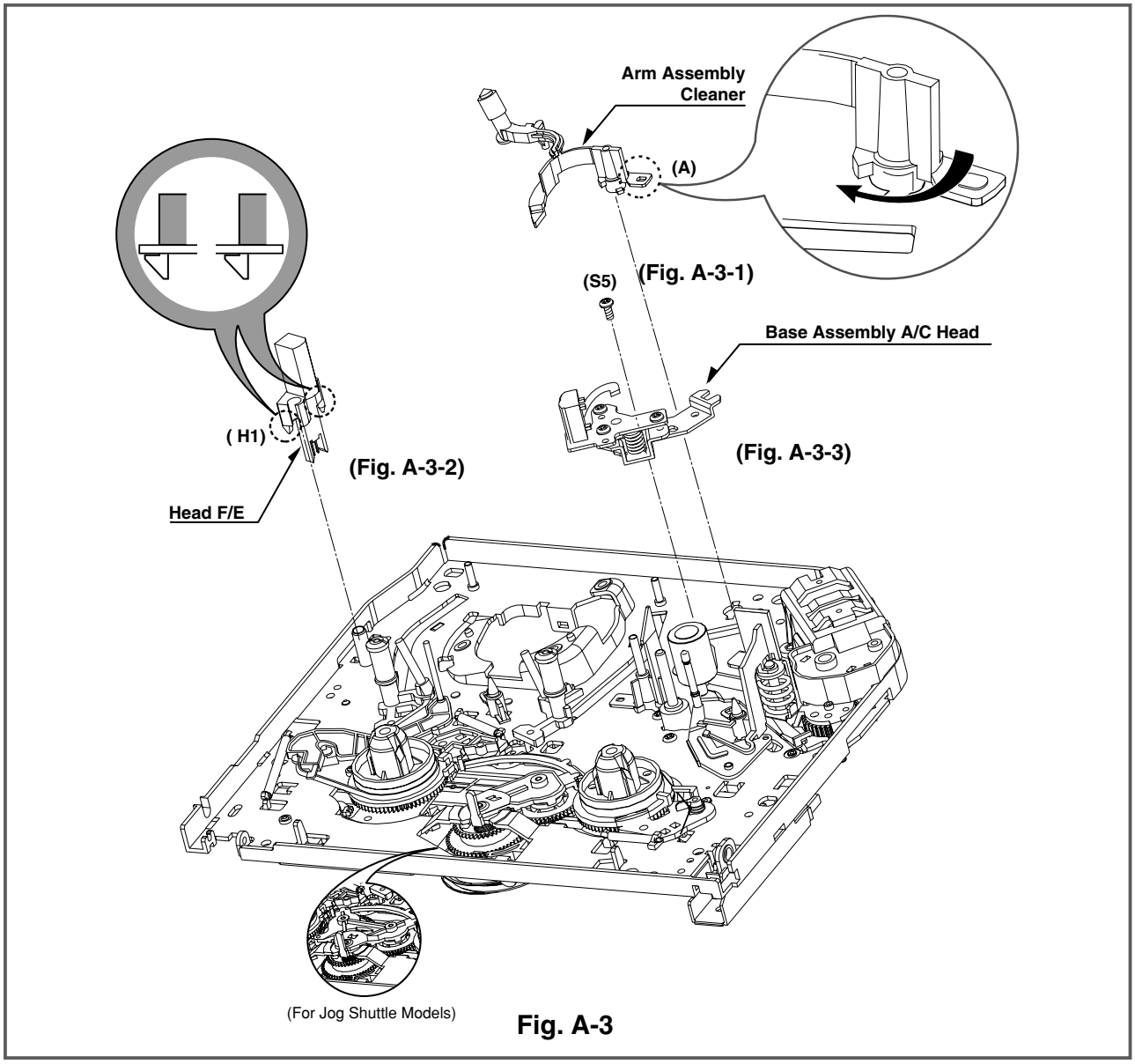

Fig. A-3

NOTE

(1) Place the Spring Lever S/W of the above (No.1) as original position.

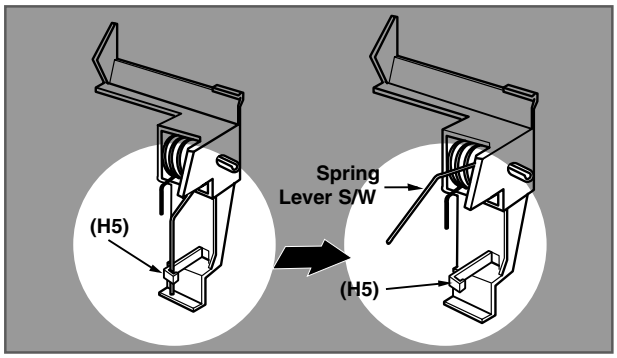

8. Arm Assembly Cleaner(Fig. A-3-1)

1) Break away the (A) part shown above Fig. A-3-1 from the Embossing of the Chassis in the clockwise direction and lift up the Arm Assembly Cleaner.

9. Head F/E (Fig. A-3-2)

1) Unhook the two Hooks (H1) on the back side of the Chassis and lift up the Head F/E.

10. Base Assembly A/C Head (Fig. A-3-3)

1) Remove the Screw (S5) and lift up the Base Assembly A/C Head.

Downloaded from www.Manualslib.com manuals search engine

DECK MECHANISM DISASSEMBLY

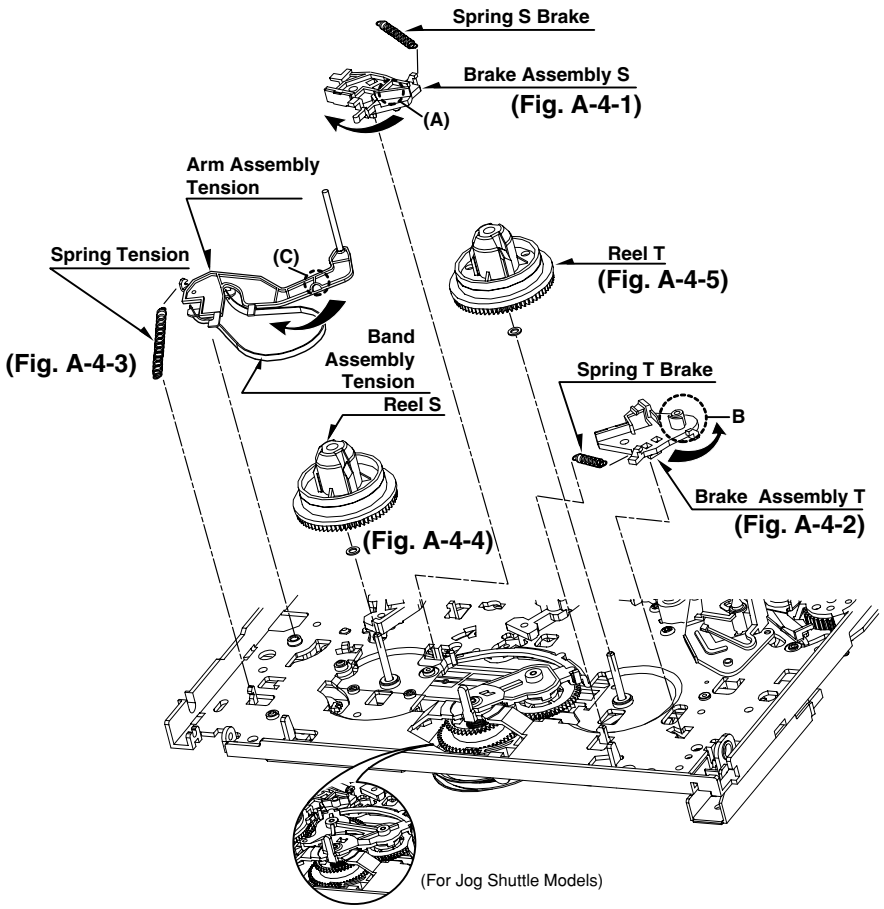

Fig. A-4

11. Brake Assembly S (Fig. A-4-1)

1) Remove the Spring S Brake.
2) Hold the (A) part shown above Fig. A-4-1 and turn to the clockwise direction, and then lift up the Brake Assembly S.

NOTE

(1) When reassembling, be careful not to change the Spring with below No.12.(Refer to Fig. B-2).

12. Brake Assembly T (Fig. A-4-2)

1) Remove the Spring T Brake.
2) Hold the (B) part shown above Fig. A-4-2 and turn to the counterclockwise direction, and then lift up the Brake Assembly T.

NOTE

(1) When reassembling, be careful not to change the Spring with above No.11.(Refer to Fig. B-2).

(Difference for Springs) **(Fig. B-2)**

	Spring T Brake Color (Black)
	Spring S Brake
	Spring Tension

13. Arm Assembly Tension (Fig. A-4-3)

1) Remove the Spring Tension.
2) Hold the (C) part shown above Fig. A-4-3 and turn to the clockwise direction, and then lift up the Arm Assembly Tension.

NOTE

(1) When reassembling, be careful not to change the Spring with above No.11,12.(Refer to Fig. B-2).

14. Reel S (Fig. A-4-4) & Reel T (Fig. A-4-5)

1) Lift up the Reel S and Reel T.

NOTE

(1) When reassembling, be careful not to change the Reel S and Reel T each other.

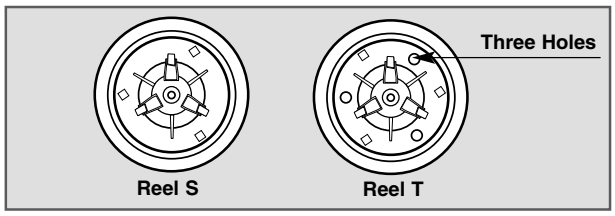

(2) Confirm two Slide Washers under the Reel S and Reel T.

Downloaded from www.Manualslib.com manuals search engine

DECK MECHANISM DISASSEMBLY

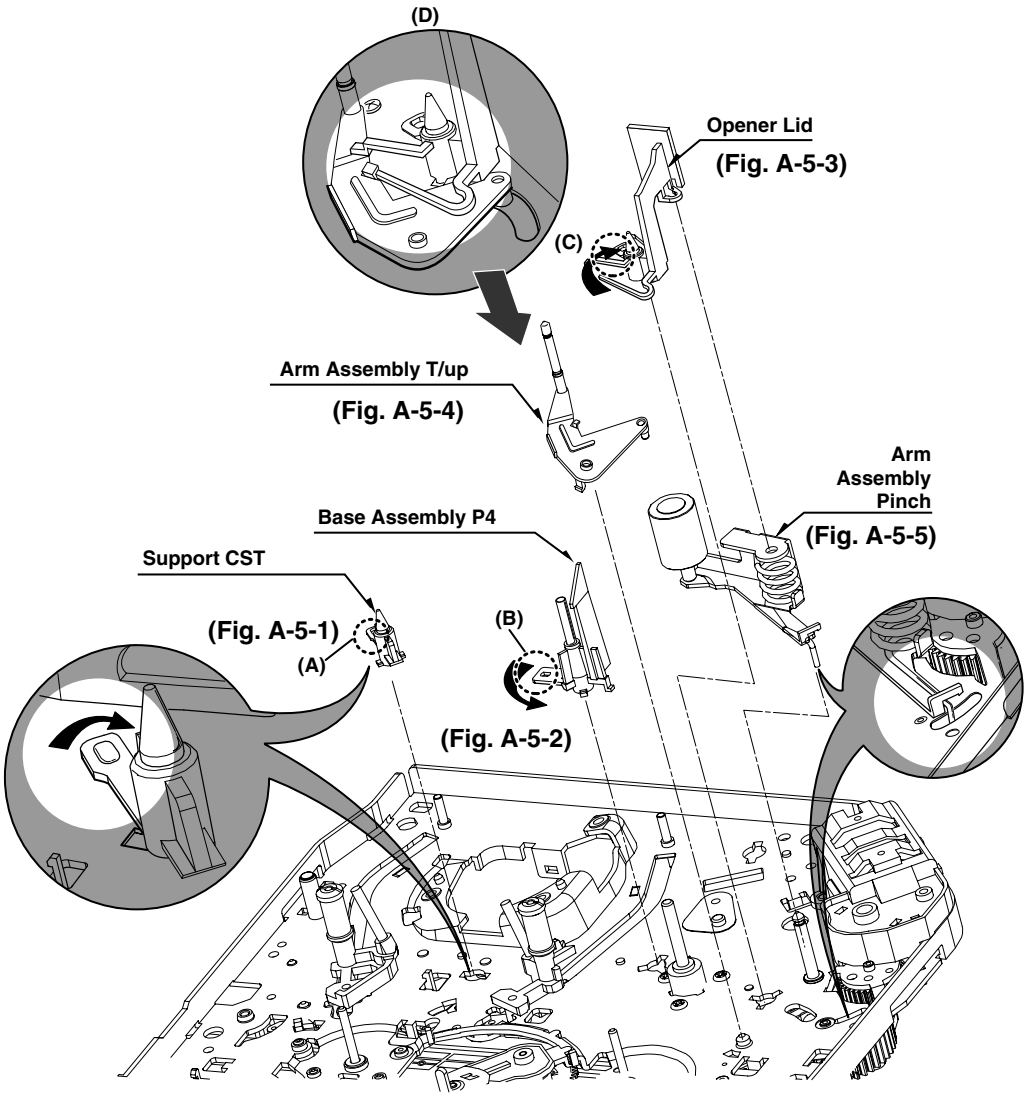

Fig. A-5

15. Support CST (Fig. A-5-1)

1) Break away the (A) part shown above Fig. A-5-1 from the Embossing of the Chassis in the clockwise direction, and lift up the Support CST.

16. Base Assembly P4 (Fig. A-5-2)

1) Break away the (B) part shown above Fig. A-5-2 from the Embossing of the Chassis in the counterclockwise direction and lift up the Base Assembly P4.

17. Opener Lid (Fig. A-5-3)

1) Break away the (C) Part of the Opener Lid from the Embossing of the Chassis in the Clockwise direction and lift up the Opener Lid.

18. Arm Assembly T/up (Fig. A-5-4)

1) Just lift up the Arm Assembly T/UP.

NOTE

(1) When reassembling, confirm the opener lid is placed on the Hook(H1) of the Arm Assembly T/UP as below figure.

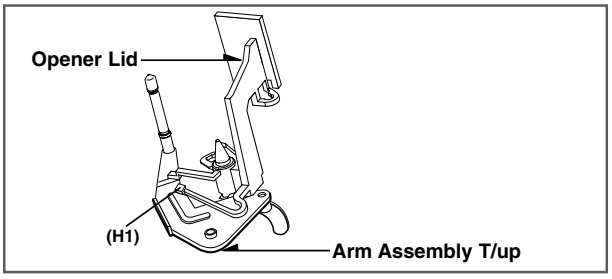

19. Arm Assembly Pinch (Fig. A-5-5)

1) Lift up the Arm Assembly Pinch.

Downloaded from www.Manualslib.com manuals search engine

DECK MECHANISM DISASSEMBLY

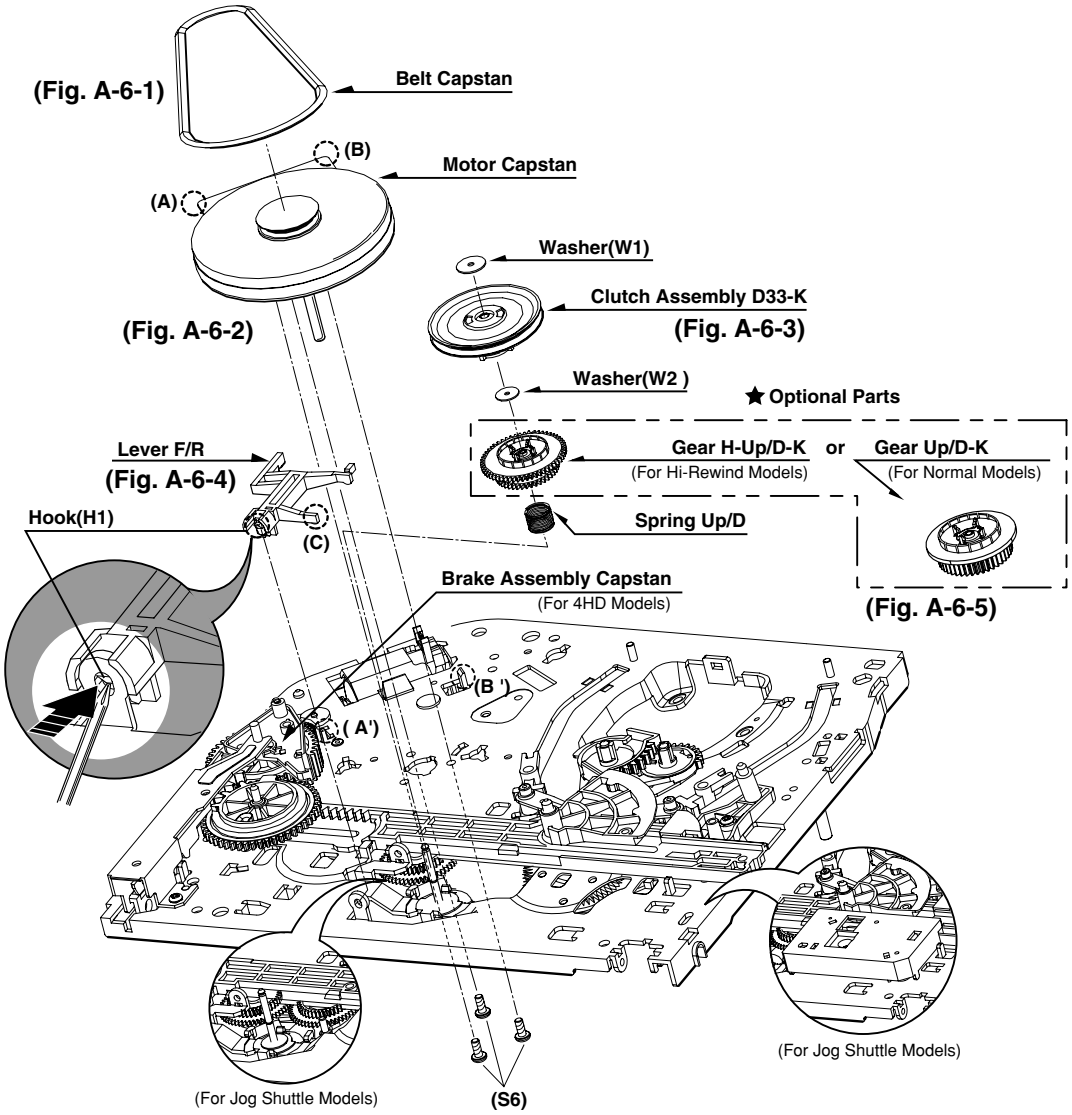

Fig. A-6

20. Belt Capstan (Fig. A-6-1)/ Motor Capstan (Fig. A-6-2)

1) Remove the Belt Capstan.
2) Remove three Screws(S6) on the back side of the Chassis and lift up the Motor Capstan.

NOTE

(1) When reassembling, Confirm the (A), (B) parts of Motor Capstan is located to the (A'), (B') of the Chassis.

21. Clutch Assembly D33-K (Fig. A-6-3)

1) Remove the Washer(W1) and lift up the Clutch Assembly D33-K.

22. Lever F/R (Fig. A-6-4)

1) Unhook the (H1) shown above Fig. A-6-4 and lift up the Lever F/R.

NOTE

(1) When reassembling, move the (C) part of the Lever F/R up and down, then confirm if it is returned to original position.

23. Gear H-Up/D-K or Gear Up/D-K (Fig. A-6-5)

1) Remove the Washer(W2) and lift up the Gear H-up/D-K.
2) Remove the Spring Up/D.

NOTE

(1) Gear H-Up/D-K is for Hi-Rewind Models.
(2) Gear Up/D-K is for Normal Models except Hi-Rewind Models.

Downloaded from www.Manualslib.com manuals search engine

DECK MECHANISM DISASSEMBLY

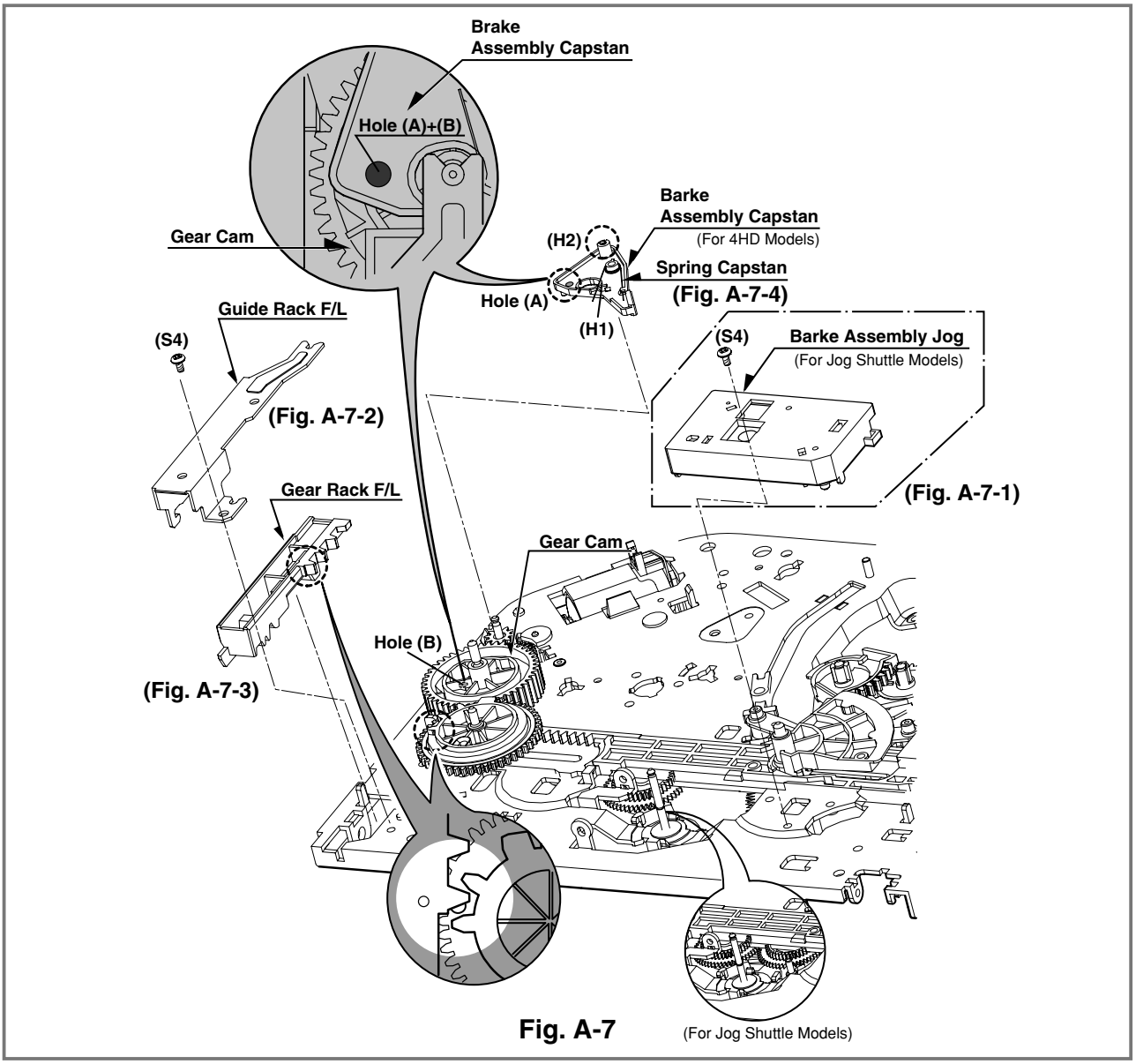

Fig. A-7

24. Bracket Assembly Jog (Fig. A-7-1) (Jog shuttle model option)

1) Remove the Screw(S4) and lift up the Bracket Assembly Jog.

25. Guide Rack F/L (Fig. A-7-2)/ Gear Rack F/L (Fig. A-7-3)

1) Remove the Screw(S4) and lift up the Guide Rack F/L.
2) Lift up the Gear Rack F/L.

26. Brake Assembly Capstan (Fig. A-7-4) (4HD model option)

1) Hook the Spring Capstan on the Hook(H1).
2) Unhook the Hook(H2) and lift up the Brake Assembly Capstan.(Refer to Fig. to the right)

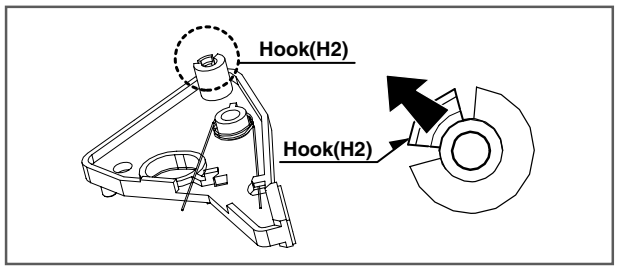

NOTE

(1) When reassembling, confirm that the Hole(A) of the Brake Assembly Capstan is aligned to the Hole(B) of the Gear Cam.
(Refer to above Fig. A-7-4).

Downloaded from www.Manualslib.com manuals search engine

DECK MECHANISM DISASSEMBLY

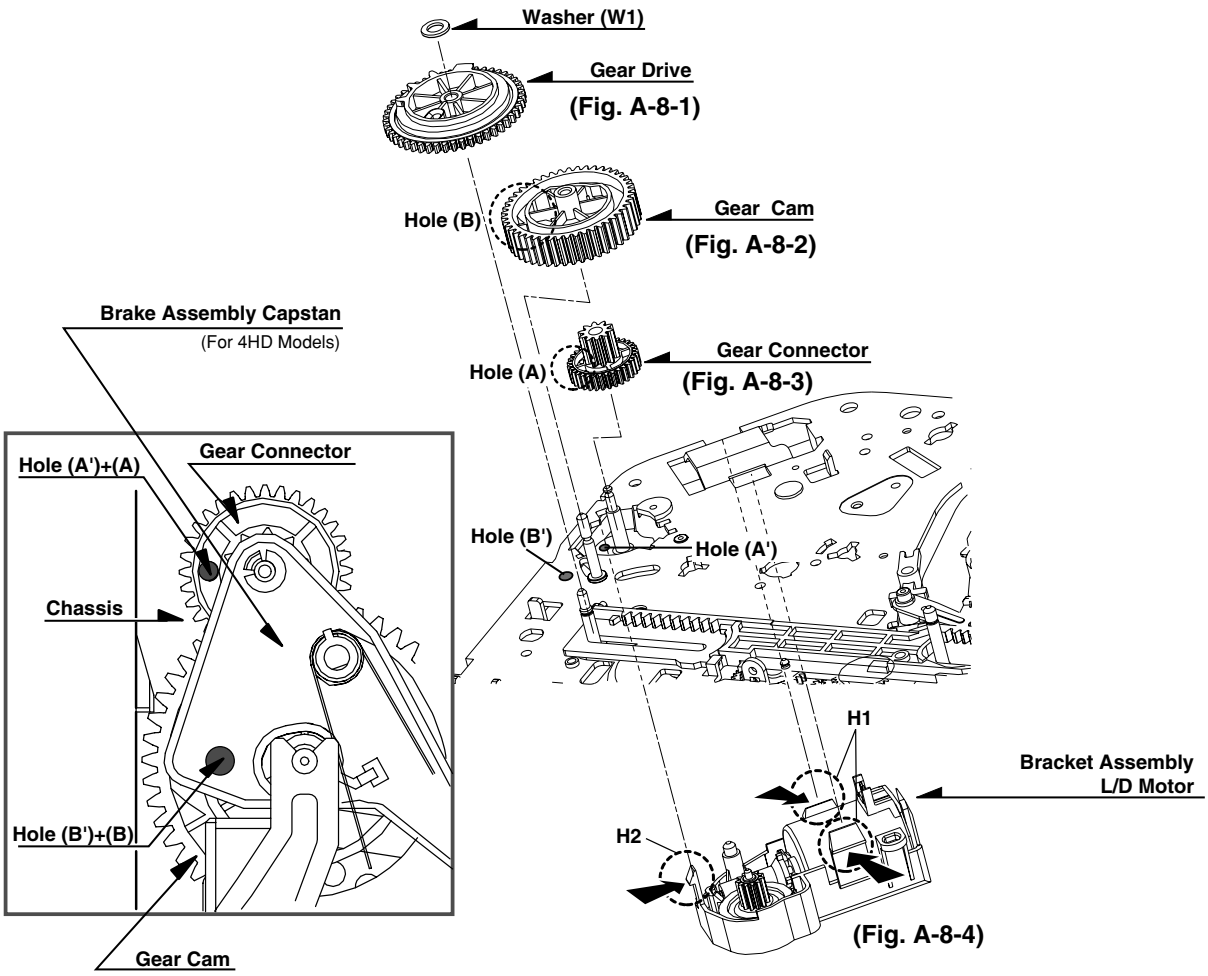

Fig. A-8

27. Gear Drive (Fig. A-8-1)/ Gear Cam (Fig. A-8-2)/ Gear Connector (Fig. A-8-3)

1) Remove the Washer(W1) and lift up the Gear Drive.
2) Lift up the Gear Cam.
3) Lift up the Gear Connector.

NOTE

(1) When reassembling, confirm that the Hole (A) of the Gear Connector is aligned to the Hole (A') of the Chassis (Fig. A-8-3).
(2) When reassembling, confirm that the Hole (B) of the Gear Cam is aligned to the Hole (B') of the Chassis (Fig. A-8-2).
(3) When reassembling, confirm that the (C) part of the Gear Cam is aligned to the (D) part of the Gear Drive as shown Fig. B-3

(Fig. B-3)

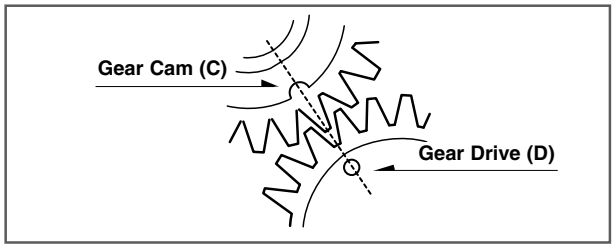

28. Bracket Assembly L/D Motor (Fig. A-8-4)

1) Unhook the three Hooks(H1),(H2) and push down the Bracket Assembly L/D Motor.

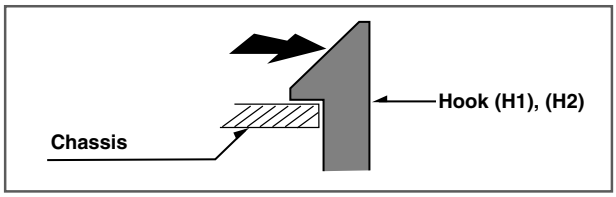

Downloaded from www.Manualslib.com manuals search engine

DECK MECHANISM DISASSEMBLY

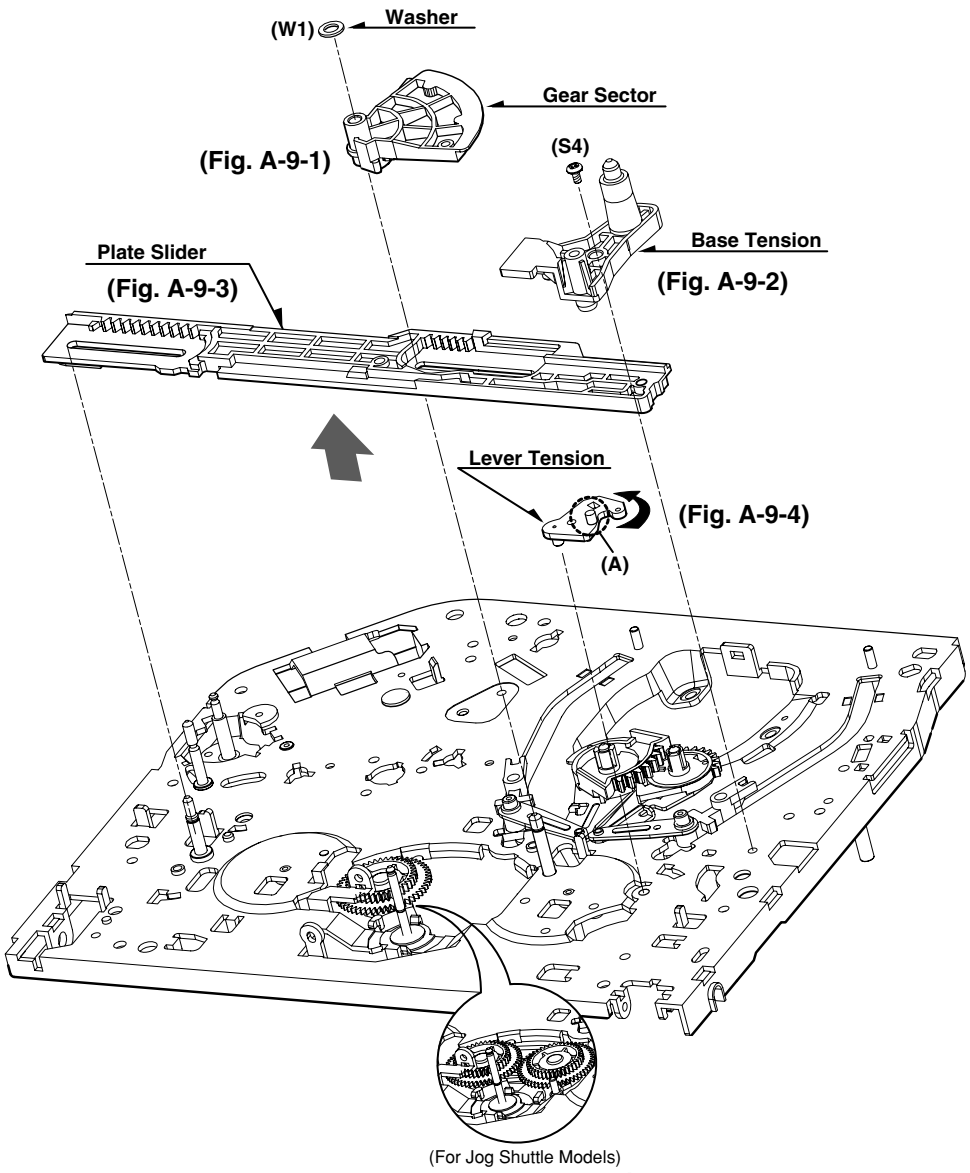

Fig. A-9

29. Gear Sector (Fig. A-9-1)

1) Remove the Washer(W1) and lift up the Gear Sector.

30. Base Tension (Fig. A-9-2)/ Plate Slider (Fig. A-9-3)/ Lever Tension (Fig. A-9-4)

1) Remove the Screw(S4) and lift up the Base Tension.
2) Lift up the Plate Slider.
3) Hold the (A) Part of the Lever Tension and turn to the counterclockwise direction, and then lift up the Lever Tension.

NOTE

(1) When reassembling, turn the Lever Tension to the clockwise direction in maximum.
(2) Push the plate slide right side to be guided by the shaft.

Downloaded from www.Manualslib.com manuals search engine

DECK MECHANISM DISASSEMBLY

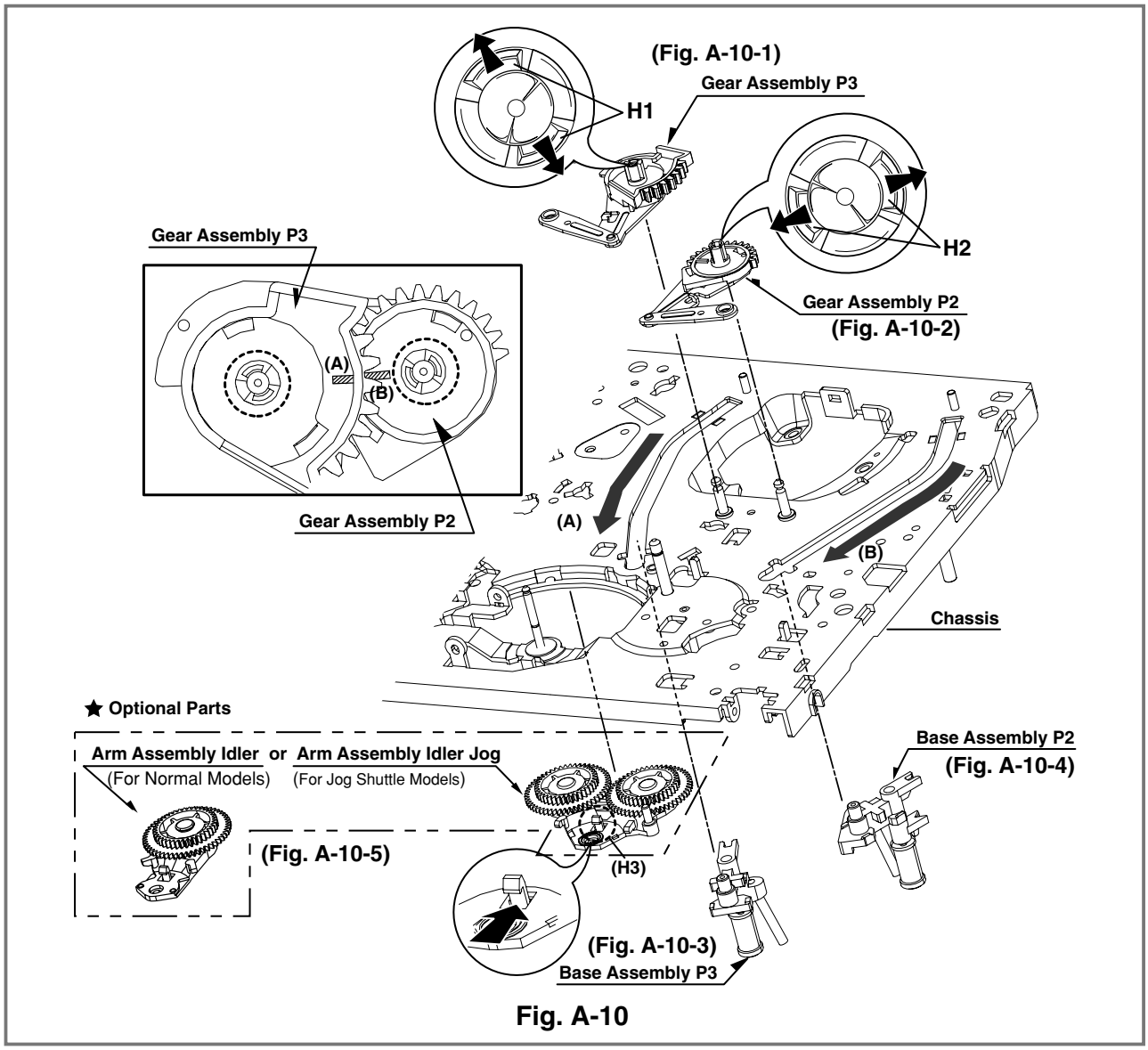

Fig. A-10

31. Gear Assembly P3 (Fig. A-10-1)/ Gear Assembly P2 (Fig. A-10-2)

1) Unhook the two Hooks(H1) and lift up the Gear Assembly P3.
2) Unhook the two Hooks(H2) and lift up the Gear Assembly P2.

32. Base Assembly P3 (Fig. A-10-3)/ Base Assembly P2 (Fig. A-10-4)

1) Move the Base Assembly P3 in the direction of the arrow of the Chassis Hole(A) and push down the Base Assembly P3.
2) Move the Base Assembly P2 in the direction of the arrow of the Chassis Hole(B) and push down the Base Assembly P2.

33. Arm Assembly Idler or Arm Assembly Idler Jog(Fig. A-10-5)

1) Unhook the Hook(H3) and push down the Arm Assembly Idler Jog.

NOTE

1) Arm Assembly Idler is for Normal Models.
2) Arm Assembly Idler Jog is for Jog Shuttle Models.

NOTE

1) When reassembling, confirm that the (A) Part of the Gear Assembly P3 is aligned to the (B) Part of the Gear Assembly P2 as shown below.

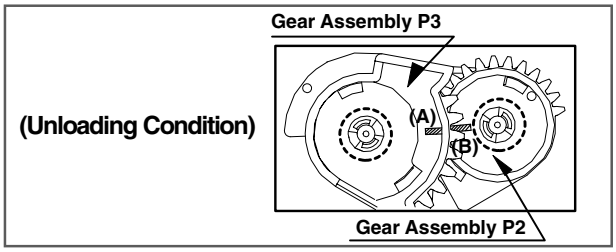

Downloaded from www.Manualslib.com manuals search engine

DECK MECHANISM ADJUSTMENT

• Tools and Fixtures for Service

1. Cassette Torque meter SRK-VHT-303(Not SVC part) 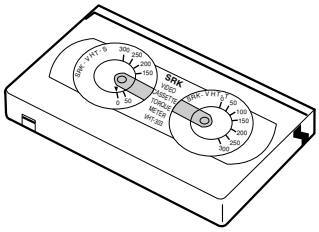	**2. Alignment tape (See figure below)** 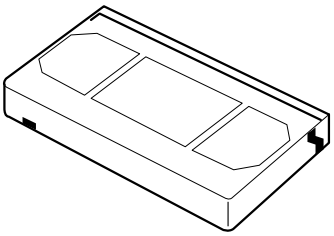	**3. Torque gauge 600g.Cm ATG** 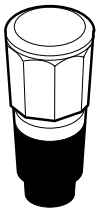
4. Torque gauge adaptor 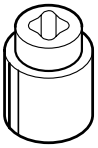	**5. Post height adjusting driver Parts No: SV-TGO-030-000 (SMALL) SV-TGO-020-000 (LARGE)** 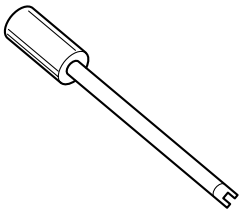	**6. + Type driver (ø 5)** 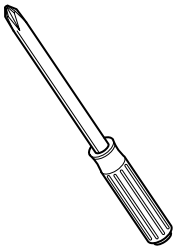

ALIGNMENT TAPES FOR ADJUSTMENT

Derivation No.		A	B	C	D
Mechanism		PAL	PAL	NTSC	NTSC
Adjustment Items		SP/LP 2/4 Head	SP 2 Head	SP/LP/EP 2/4 Head	SP 2 Head
FM Envelope		TTV-P2L	TTV-P2	TTV-N1 (TTN-N12)	TTV-N2
A/C Head	Slantness	A commercially available tape			
	Height	TTV-P1 (TTV-P1L)	TTV-P1	TTV-N1 (TTV-N12) (TTV-N1E)	TTV-N1 (TTV-N12)
	Azimuth	TTV-P2	TTV-P2	TTV-N2	TTV-N2
X-value		TTV-P2	TTV-P2	TTV-N2 TTV-N2E	TTV-N2
RG Post Inclination		A commercially available tape			
Tape Back Tension		SRK-VHT-303			

The numbers in ( ) parenthesis can be used as the substiture.

Downloaded from www.Manualslib.com manuals search engine

DECK MECHANISM ADJUSTMENT

1.Mechanism Alignment Position Check

Purpose:To determine if the Mechanism is in the correct position, when a Tape is ejected.

Test Equipment/ Fixture	Test Conditions (Mechanism Condition)	Check Point
• Blank tape	• Eject Mode (with Cassette ejected)	• Mechanism and Mode Switch Position

1) Turn the Power S/W on and eject the Cassette by pressing the Eject Button.
2) Remove the Top Cover and Plate Assembly Top, visually check if the Gear Cam Hole is aligned with the Chassis Hole as below Fig. C-2.
3) IF not, rotate the Shaft of the Loading Motor to either Clockwise or Counterclockwise until the Alignment is as below Fig. C-2.
4) Remove the Screw which fixes the Deck Mechanism and Main Frame and confirm if the Gear Cam is aligned with the Gear Drive as below Fig. C-1(A).
5) Confirm if the Mode S/W on the Main P.C.Board is aligned as below Fig. C-1(B).
6) Remount the Deck Mechanism on the Main P.C.Board and check each operation.

CHECK DIAGRAM

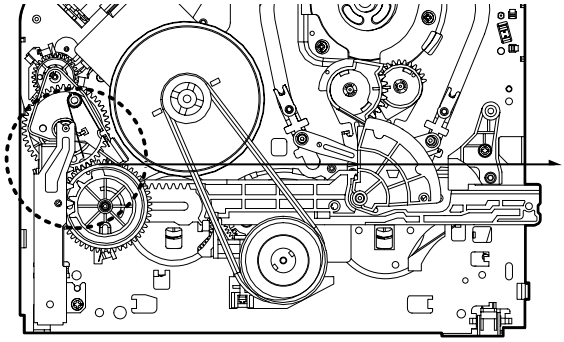

BOTTOM VIEW

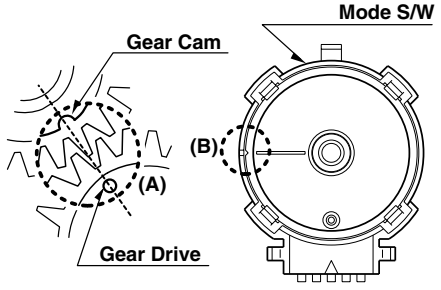

Gear Cam (^) and Gear Drive (o) groove alignment

Fig. C-1

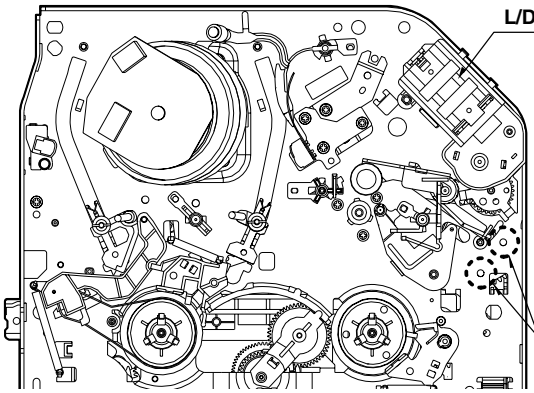

TOP VIEW

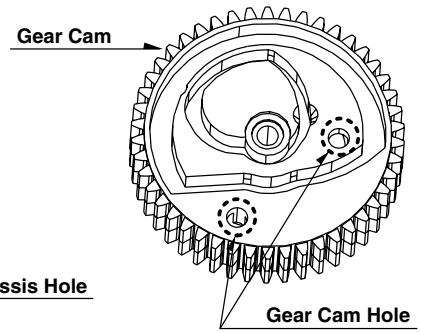

Fig. C-2

Downloaded from www.Manualslib.com manuals search engine

DECK MECHANISM ADJUSTMENT

2. Preparation for Adjustment (To set the Deck Mechanism to the Loading state without inserting a Cassette Tape).

1) Unplug the Power Cord from the AC Outlet.
2) Disassemble the Top Cover and Plate Assembly Top.
3) Plug the Power Cord into the AC Outlet.
4) Turn the Power S/W on and push the Lever Stopper (L),(R) of the Holder Assembly CST to the back for Loading the Cassette without Tape.
Cover the Holes of the End Sensors at the both sides of the Bracket Side(L) and Bracket Assembly Door to prevent a light leak.
Then The Deck Mechanism drives to the Stop Mode.
In this case, The Deck Mechanism can accept inputs of each mode, however the Rewind and Review Operation can not be performed for more than a few seconds because the Take-up Reel Table is in the Stop State and can not be detected the Reel Pulses.

3. Checking Torque

Purpose: To insure smooth Transport of the Tape during each Mode of Operation.
If the Tape Transport is abnormal, then check the Torque as indicated by the chart below.

Test Equipment/ Fixture	Test Conditions (Mechanism Condition)	Checking Method
• Torque Gauge(600g/cm ATG) • Torque Gauge Adaptor • Cassette Torque Meter SRK-VHT-303	• Play (FF) or Review (REW) Mode	• Perform each Deck Mechanism Mode without inserting a Cassette Tape(Refer to above No.2 Preparation for Adjustment). • Read the Measurement of the Take-up or Supply Reels on the Cassette Torque Meter(Fig. C-3-2). • Attach the Torque Gauge Adaptor to the Torque Gauge and then read the Value of it(Fig. C-3-1).

Item	Mode	Test Equipment	Measurement Reel	Measurement Values
Fast Forward Torque	Fast Forward	Cassette Torque Gauge	Take-Up Reel	More than 400g/cm
Rewind Torque	Rewind	Cassette Torque Gauge	Supply Reel	More than 400g/cm
Play Take-Up Torque	Play	Cassette Torque Meter	Take-Up Reel	75~115g/cm
Review Torque	Review	Cassette Torque Meter	Supply Reel	130~200g/m

NOTE:

The Values are measured by using a Torque Gauge and Torque Gauge Adaptor with the Torque Gauge affixed.

• Cassette Torque Meter (SRK-VHT-303)

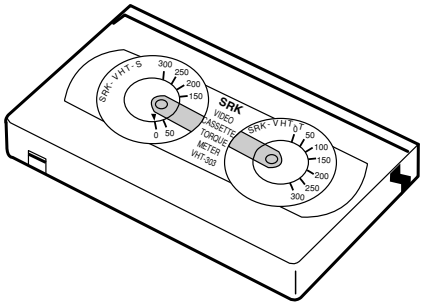

Fig. C-3-2

NOTE:

The Torque reading to measure occurs when the Tape abruptly changes direction from Fast Forward of Rewind Mode, when quick bracking is applied to both Reels.

• Torque Gauge (600g.cm ATG)

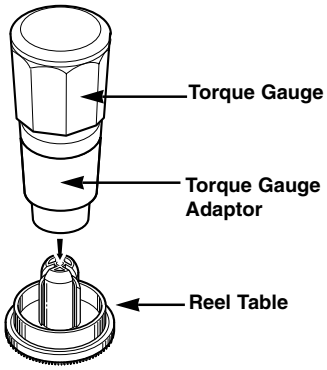

Fig. C-3-1

Downloaded from www.Manualslib.com manuals search engine

DECK MECHANISM ADJUSTMENT

4.Guide Roller Height Adjustment

Purpose: To regulate the Height of the Tape so that the Bottom of the Tape runs along the Tape Guide Line on the Lower Drum.

4-1. Preliminary Adjustment

Test Equipment/ Fixture	Test Conditions (Mechanism Condition)	Adjustment Point
• Post Height Adjusting Driver	• Play or Review Mode	• Guide Roller Height Adjustment screws on the Supply and Take-Up Guide Rollers.

Adjustment Procedure

1) Confirm if the Tape runs along the Tape Guide Line of the Lower Drum.
2) If the Tape runs the Bottom of the Guide Line, turn the Guide Roller Height Adjustment Screw to Clockwise direction.
3) If it runs the Top, turn to Counterclockwise direction.
4) Adjust the Height of the Guide Roller to be guided to the Guide Line of the Lower Drum from the Starting and Ending Point of the Drum.

ADJUSTMENT DIAGRAM

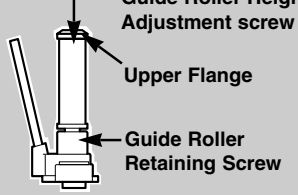

Fig. C-4-1

4-2. Precise Adjustment

Test Equipment/Fixture	Test Equipment Connection Points	Test Conditions VCR(VCP) State	Adjustment Point
• Oscilloscope • Alignment Tape • Post Height Adjusting Driver	• CH-1:PB RF Envelope • CH-2:NTSC: SW 30Hz PAL: SW 25Hz • Head Switching Output Point • RF Envelope Output Point	• Play an Alignment Tape	• Guide Roller Height Adjustment Screws

Adjustment Procedure

1) Play an Alignment Tape after connecting the Probe of the Oscilloscope to the RF Envelope Output Test Point and Head Switching Output Test Point.
2) Tracking Control(in PB Mode) : Center Position(When this Adjustment is performed after the Drum Assembly has been replaced, set the Tracking Control so that the RF Output is Maximum).
3) Height Adjustment Screw : Flatten the RF Waveform. (Fig. C-4-2)
4) Turn(Move) the Tracking Control(in PB Mode) Clockwise and Counterclockwise.(Fig. C-4-3)
5) Check that any Drop of RF Output is uniform at the Start and End of the Waveform.

NOTE

If the adjustment is excessive or insufficient the tape will jam or fold.

Waveform Diagrams

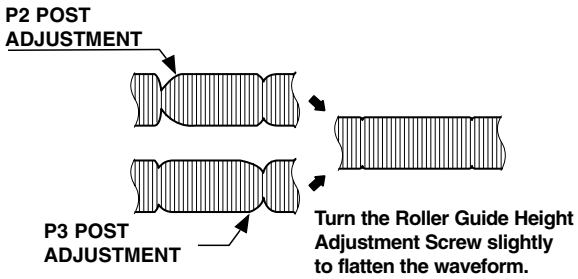

Fig. C-4-2

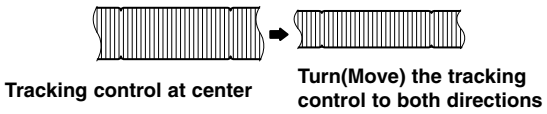

Fig. C-4-3

Connection Diagram

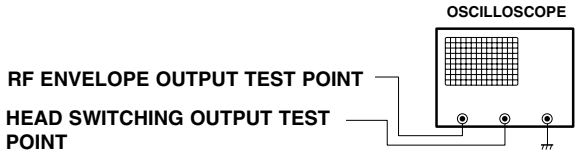

Downloaded from www.Manualslib.com manuals search engine

DECK MECHANISM ADJUSTMENT

5. Audio/Control (A/C) Head Adjustment

Purpose: To insure that the Tape passes accurately over the Audio and Control Tracks in exact Alignment in both the Record and Playback Modes.

5-1. Preliminary Adjustment (Height and Tilt Adjustment)

Perform the Preliminary Adjustment, when there is no Audio Output Signal with the Alignment Tape.

Test Equipment/ Fixture	Test Conditions (Mechanism Condition)	Adjustment Point
• Blank Tape • Screw Driver(+) Type 5mm	• Play the blank tape	• Tilt Adjustment Screw(C) • Height Adjustment Screw(B) • Azimuth Adjustment Screw(A)

Adjustment Procedure/Diagrams

1) Initially adjust the Base Assembly A/C Head as shown Fig. C-5-1 by using the Height Adjustment Screw(B).
2) Play a Blank Tape and observe if the Tape passes accurately over the A/C Head without Tape Curling or Folding.
3) If Folding or Curling is occured then adjust the Tilt Adjustment Screw(C) while the Tape is running to resemble Fig. C-5-3.
4) Reconfirm the Tape Path after Playback about 4~5 seconds.

NOTE

Ideal A/C head height occurs, when the tape runs between 0.2~0.25mm above the bottom edge of the A/C head core.

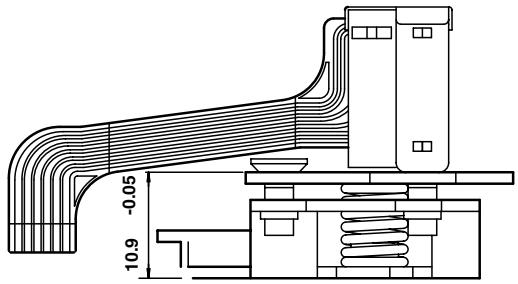

A/C Head Base

Fig. C-5-1

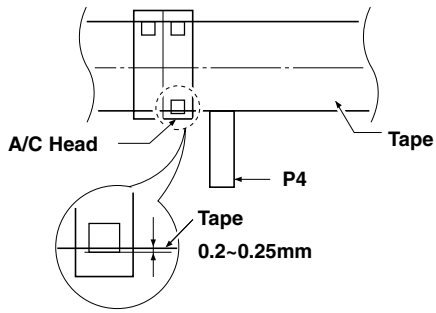

Fig. C-5-3

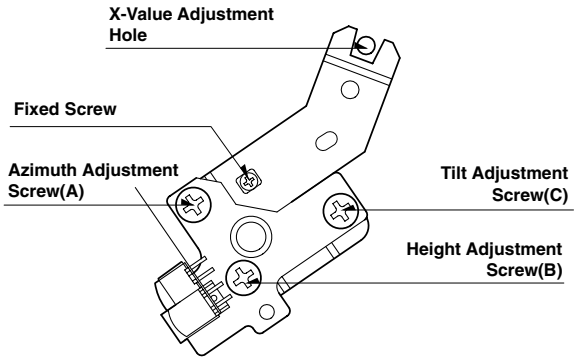

A/C Head Assembly

Fig. C-5-2

Downloaded from www.Manualslib.com manuals search engine

5-2. Confirm that the Tape passes smoothly between the Take-up Guide and Pinch Roller(using a Mirror or the naked eye).

1) Afetr completing Step 5-1.(Preliminary Adjustment), check that the Tape passes around the Take-up Guide and Pinch Roller without Folding or Curling at the Top or Bottom.
   (1) If Folding or Curling is observed at the Bottom of the Take-up Guide then slowly turn the Tilt Adjustment Screw(C) in the Clockwise directioin.
   (2) If Folding or Curling is observed at the Top of it then slowly turn the Tilt Adjustment Screw(C) in the Counterclockwise direction.

NOTE:

Check the RF Envelope after adjusting the A/C Head, if the RF Waveform differs from Fig. C-5-4, performs Precise Adjustment to flat the RF Waveform.

5-3. Precise Adjustment (Azimuth adjustment)

Test Equipment/ Fixture	Connection Point	Test Conditions (Mechanism Condition)	Adjustment Point
• Oscilloscope • Alignment Tape(SP) • Screw Driver(+) Type 5mm	• Audio output jack	• Play an Alignment Tape 1KHz, 7KHz Sections	• Azimuth Adjustment Screw(A) • Height Adjustment Screw(B)

Adjustment Procedure

1) Connect the Probe of the Oscilloscope to Audio Output Jack.
2) Alternately adjust the Azimuth Adjustment Screw(A) and the Tilt Adjustment Screw(C) for Maximum Output of the 1Khz and 7Khz segments, while maintaining the flattest Envelope differential between the two Frequencies.

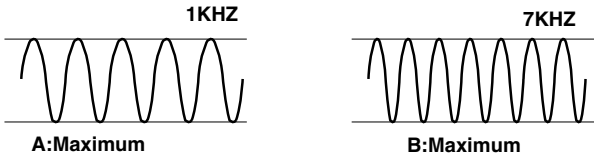

Fig. C-5-4

6. X-Value Adjustment

Purpose: To obtain compatibility with other VCR(VCP) Models.

Test Equipment/ Fixture	Connection Point	Test Conditions (Mechanism Condition)	Adjustment Point
• Oscilloscope • Alignment tape(SP only) • Screw Driver(+) Type 5mm	• CH-1: PB RF Envelope • CH-2: NTSC: SW 30Hz PAL: SW 25Hz • Head Swithching Output Test Point • RF Envelope Output Test Point	• Play an Alignment Tape	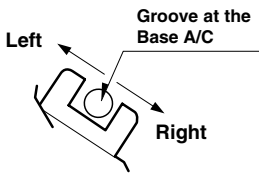

Adjustment Procedure

1) Insert the alignment tape, and press the + or - manual tracking (channel) button once while "AUTO TRACKING" is flashing on the screen to release auto tracking, and then center the tracking.
2) Run the tape long enough for tracking to complete one cycle.
3) Loosen the fixing screw, and move the A/C head base assembly in the direction shown in the diagram, to find the center of the peak so that the maximum envelope is available.
   With this method, the 31-μm head can trace on the centerof 58-μm track.
4) Tighten the A/C head base assembly fixing screw.

Adjustment Diagram

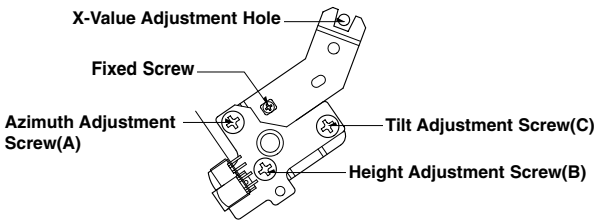

Connection Diagram

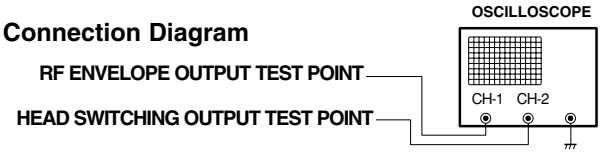

Downloaded from www.Manualslib.com manuals search engine

DECK MECHANISM ADJUSTMENT

7. Adjustment after Replacing Drum Assembly (Video Heads)

Purpose: To correct for shift in the Roller Guide and X value after replacing the Drum.

Test Equipment/ Fixture	Connection Point	Test Conditions (Mechanism Condition)	Adjustment Points
• Oscilloscope • Alignment tapes • Blank Tape • Post Height Adjusting Driver • Screw Driver(+) Type 5mm	• CH-1: PB RF Envelope • CH-2: NTSC: SW 30Hz PAL: SW 25Hz • Head Swithching Output Test Point • RF Envelope Output Test Point	• Play the blank tape • Play an alignment tape	• Guide Roller Precise Adjustment • Switching Point • Tracking Preset • X-Value

Checking/Adjustment Procedure

Play a blank tape and check for tape curling or creasing around the roller guide. If there is a problem then follow the procedure 4. "Guide Roller Height" and 5. "Audio Control(A/C) Head Adjustment".

Connection Diagram

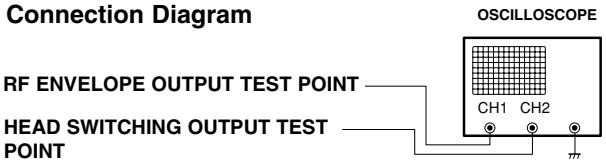

Waveform

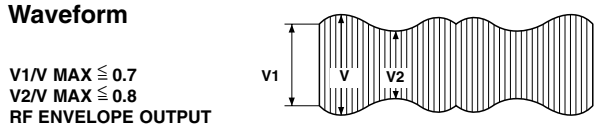

Fig. C-7

8. Check the Tape Travel after Reassembling Deck Assembly.

8-1.Check Audio and RF Locking Time during playback and after CUE or REV (FF/REW)

Test Equipment/ Fixture	Specification	Connection Points	Test Conditions (Mecanism Condition)
• Oscilloscope • Alignment tapes(with 6H 3kHz Color Bar Signal) • Stop Watch	• RF Locking Time: Less than 5 sec. • Audio Locking Time:Less than 10sec	• CH-1: PB RF Envelope • CH-2: Audio Output • RF Envelope Output Point • Audio Ouptut Jack	• Play an alignment tape (with 6H 3kHz Color Bar Signal)

Checking Procedure

Play an alignment tape then change the operating mode to CUE or REV and confirm if the unit meets the above listed specifications.

NOTES:

1) CUE is fast forward mode (FF)
2) REV is the rewind mode (REW)

8-2.Check for tape curling or jamming

Test Equipment/ Fixture	Specification	Test Conditions (Mecanism Condition)
• T-160 Tape • T-120 Tape	• Be sure there is no tape jamming or curling at the begining, middle or end of the tape.	• Run the CUE, REV play mode at the beginning and the end of the tape.

Checking Procedure

1) Confirm that the tape runs smoothly around the roller guides, drum and A/C head assemblies while abruptly changing operating modes from Play to CUE or REV. This is to be checked at the begining, middle and end sections of the cassette.
2) Confirm that the tape passes over the A/C head assembly as indicated by proper audio reproduction and proper tape counter performance.

Downloaded from www.Manualslib.com manuals search engine

MAINTENANCE/INSPECTION PROCEDURE

1 Check before starting repairs

The following faults can be remedied by cleaning and oiling. Check the needed lubrication and the conditions of cleanliness in the unit.
Check with the customer to find out how often the unit is used, and then determine that the unit is ready for inspection and maintenance. Check the following parts.

Phenomenon	Inspection	Replace-ment	
Color beats	Dirt on full-erase head	o	F/E Head
Poor S/N, no color	Dirt on video head	o	Video Head
Vertical or Horizontal jitter	Dirt on video head Dirt on tape transport system	o	Video Head
Low volume, Sound distorted	Dirt on Audio/control head	o	A/C Head
Tape does not run. Tape is slack	Dirt on pinch roller	o	Pinch Roller Belt Capston
In Review and Unloading (off mode), the Tape is rolled up loosely.	Clutch Assembly D33K Torque reduced	o	Clutch Assembly D33K
	Cleaning Drum and transport system	Fig. C-9-3	

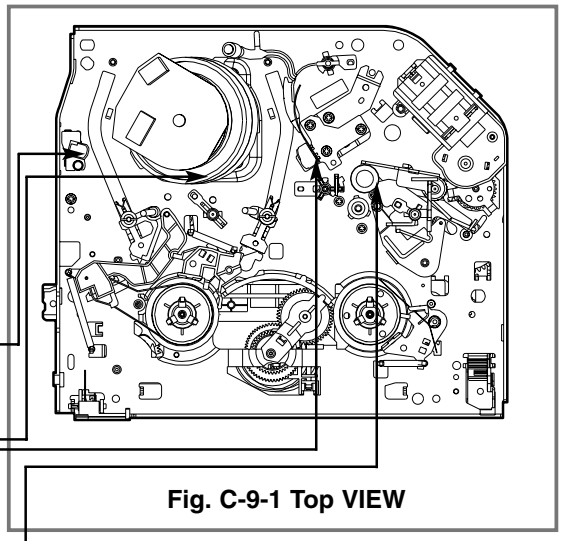

Fig. C-9-1 Top VIEW

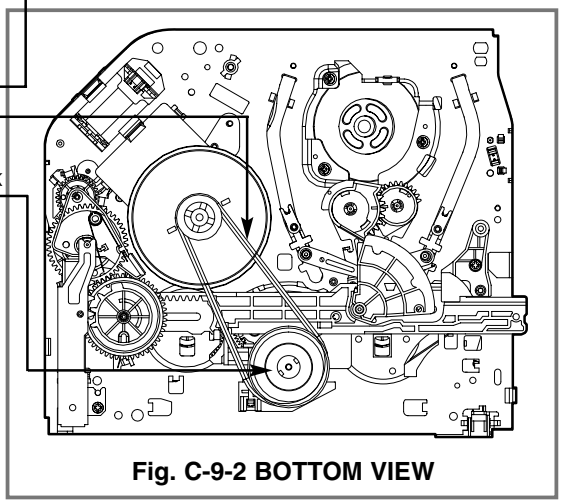

Fig. C-9-2 BOTTOM VIEW

NOTE

If locations marked with **o** do not operate normally after cleaning, check for wear and replace.
See the EXPLODED VIEWS at the end of this manual as well as the above illustrations See the Greasing (Page 87) for the sections to be lubricated and greased.

*** No. (1)~(13) Indicates the Tape Path to be traveled from Supply Reel to Take-up Reel.**

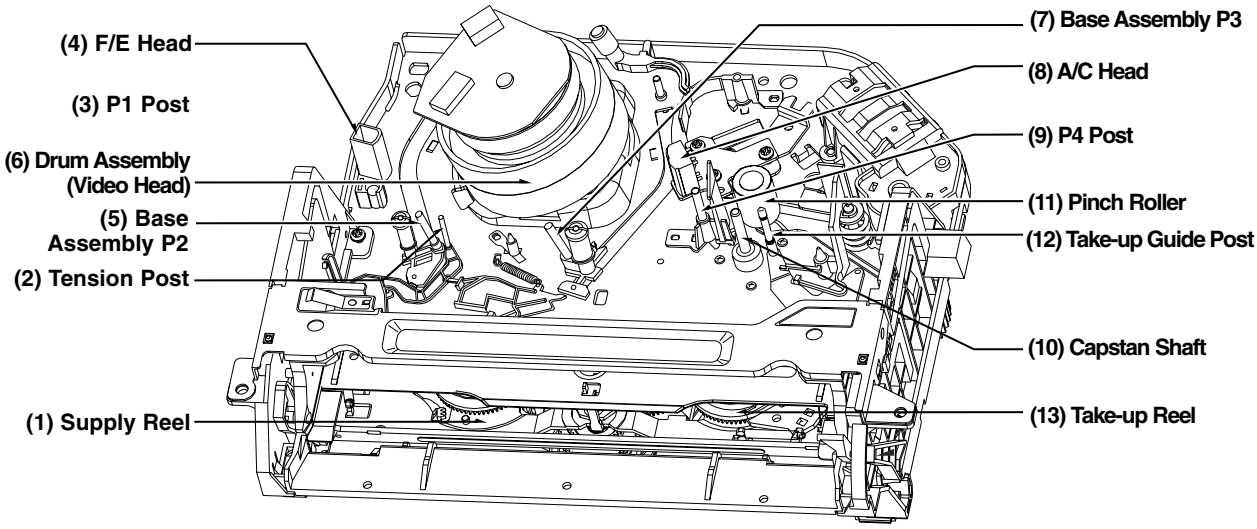

Fig. C-9-3 Tape Transport System

Downloaded from www.Manualslib.com manuals search engine

MAINTENANCE/INSPECTION PROCEDURE

2. Required Maintenance

The recording density of a VCR(VCP) is much higher than that of an audio tape recorder. VCR(VCP) components must be very precise, at tolerances of 1/1000mm, to ensure compatiblity with other VCRs. If any of these components are worn or dirty, the symptoms will be the same as if the part is defective. To ensure a good picture, periodic inspection and maintenance, including replacement of worn out parts and lubrication, is necessary.

3. Scheduled Maintenance

Schedules for maintenance and inspection are not fixed because they vary greatly according to the way in which the customer uses the VCR(VCP), and the environment in which the VCR(VCP) is used.
But, in general home use, a good picture will be maintained if inspection and maintenance is made every 1,000 hours. The table below shows the relation between time used and inspection period.

Table 1

When inspection is necessary / Average hours used per day	About 1 year	About 18 months	About 3 years
One hour	▬	▬	▬
Two hours	▬	▬	
Three hours	▬		

4. Supplies Required for Inspection and Maintence

(1) Grease : Kanto G-311G (Blue) or equivalent
(2) Isopropyl Alcohol or equivalent
(3) Cleaning Patches
(4) Grease : Kanto G-381(Yellow) : Used only for Reel S and Reel T

5) Maintenance Procedure

5-1) Cleaning

(1) Cleaning video head
First use a cleaning tape. If the dirt on the head is too stubborn to remove by tape, use the cleaning patch. Coat the cleaning patch with Isopropyl Alcohol. Touch the cleaning patch to the head tip and gently turn the head(rotating cylinder) right and left.
(Do not move the cleaning patch vertically. Make sure that only the buckskin on the cleaning patch comes into contact with the head. Otherwise, the head may be damaged.)
Thoroughly dry the head. Then run the test tape. If Isopropyl Alcohol remains on the video head, the tape may be damaged when it comes into contact with the head surface.
(2) Clean the tape transport system and drive system, etc, by wiping with a cleaning patch wetted with Isporopyl Alcohol.

NOTES:

① It is the tape transport system which comes into contact with the running tape. The drive system consists of those parts which moves the tape.
② Make sure that during cleaning you do not touch the tape transport system with the tip of a screw driver and no that force is that would cause deforming or damage applied to the system.

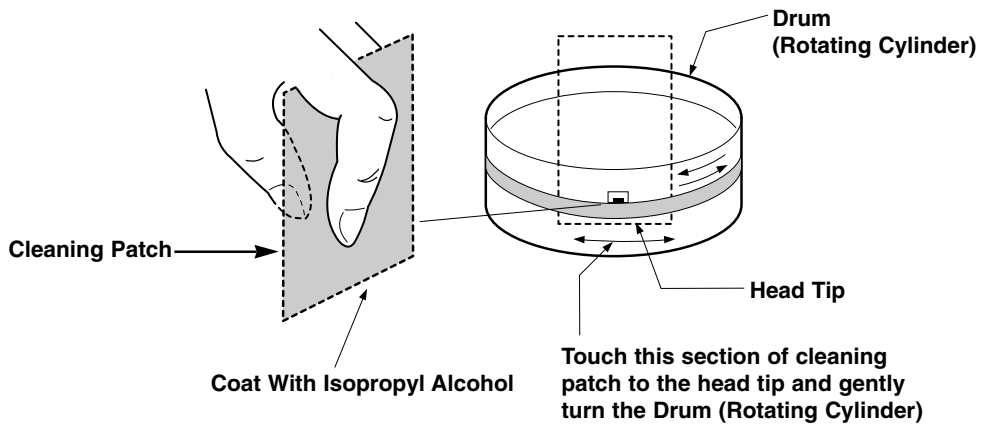

Fig. C-9-4

Downloaded from www.Manualslib.com manuals search engine

MAINTENANCE/INSPECTION PROCEDURE

5-2) Greasing

(1) Greasing guidelines
Apply grease, with a cleaning patch. Do not use excess grease. It may come into contact with the tape transport or drive system. Wipe any excess and clean with clean ing patch wetted in Isopropyl Alcohol.

NOTE:Greasing Points

1) Loading Path Inside & Top side
2) Base Tension Boss inside Hole
3) Arm Assembly F/L "U" Groove
4) Arm Take-up Rubbing Section
5) L/D Motor Worm Wheel Part
6) Shaft
7) Arm Assembly F/L of Buming Inside Hole
8) Reel S, T Shaft (G381:Yellow)
9) Brake T Groove

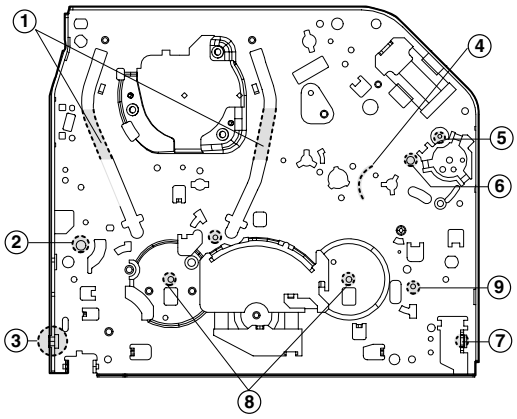

Chassis (Top)

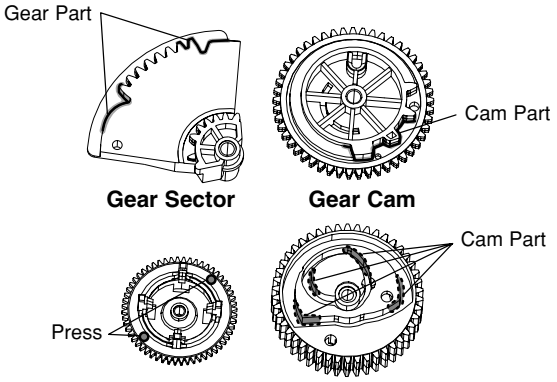

Gear Sector **Gear Cam**

Gear Assembly Up/D **Gear Drive**

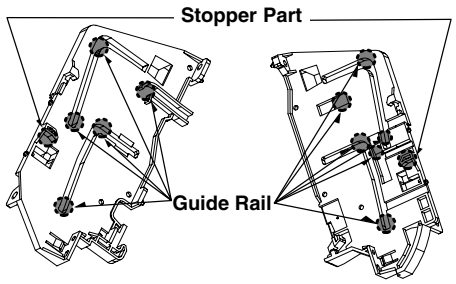

Bracket Side (L) **Bracket Assembly Door**

(2) Periodic greasing
Grease specified locations every 5,000 hours.

1) Loading Path Inside & Top side
2) Shaft
3) Gear Rack F/L Moving Section
4) Shaft
5) Lever Tension Groove
6) Clutch Assembly D33 Shaft
7) Brake "S" Rubbing Section

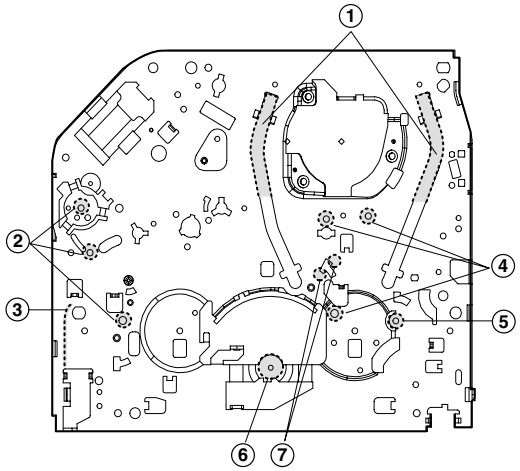

Chassis (Bottom)

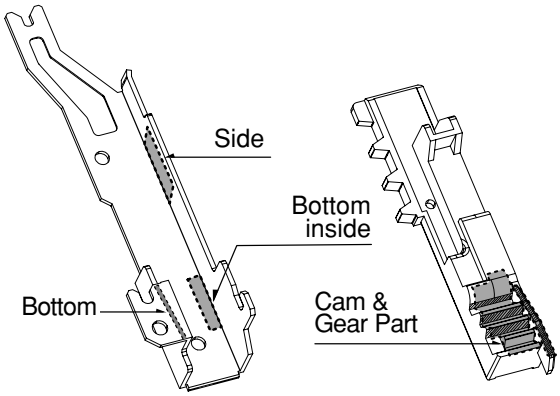

Guide Rack F/L **Gear Rack F/L**

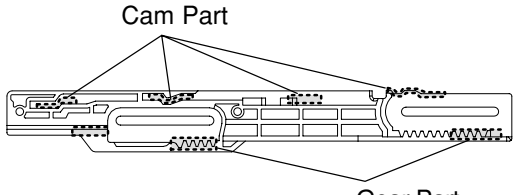

Plate Slider (Top)

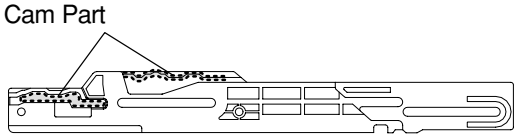

Plate Slider (Bottom)

Downloaded from www.Manualslib.com manuals search engine

MECHANISM TROUBLESHOOTING GUIDE

1.Deck Mechanism

A.

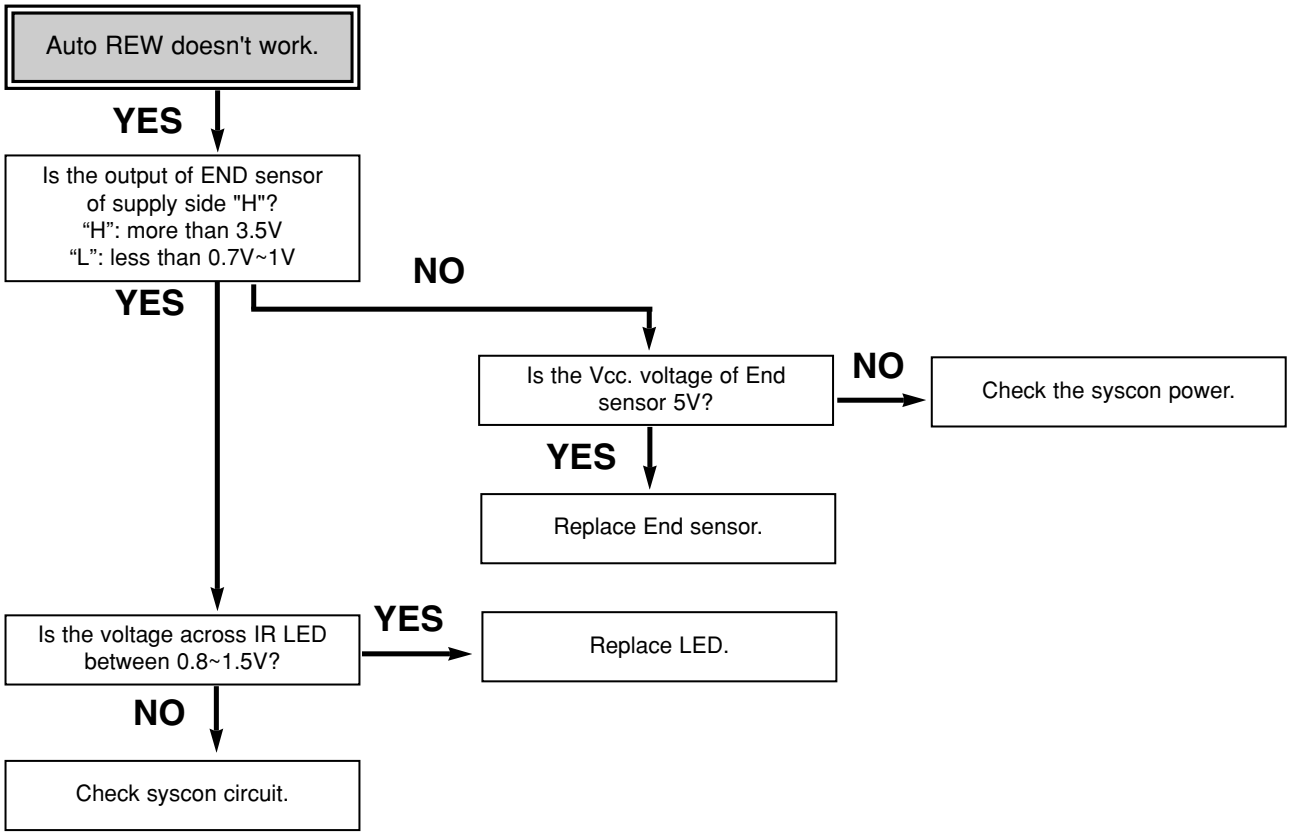

B.

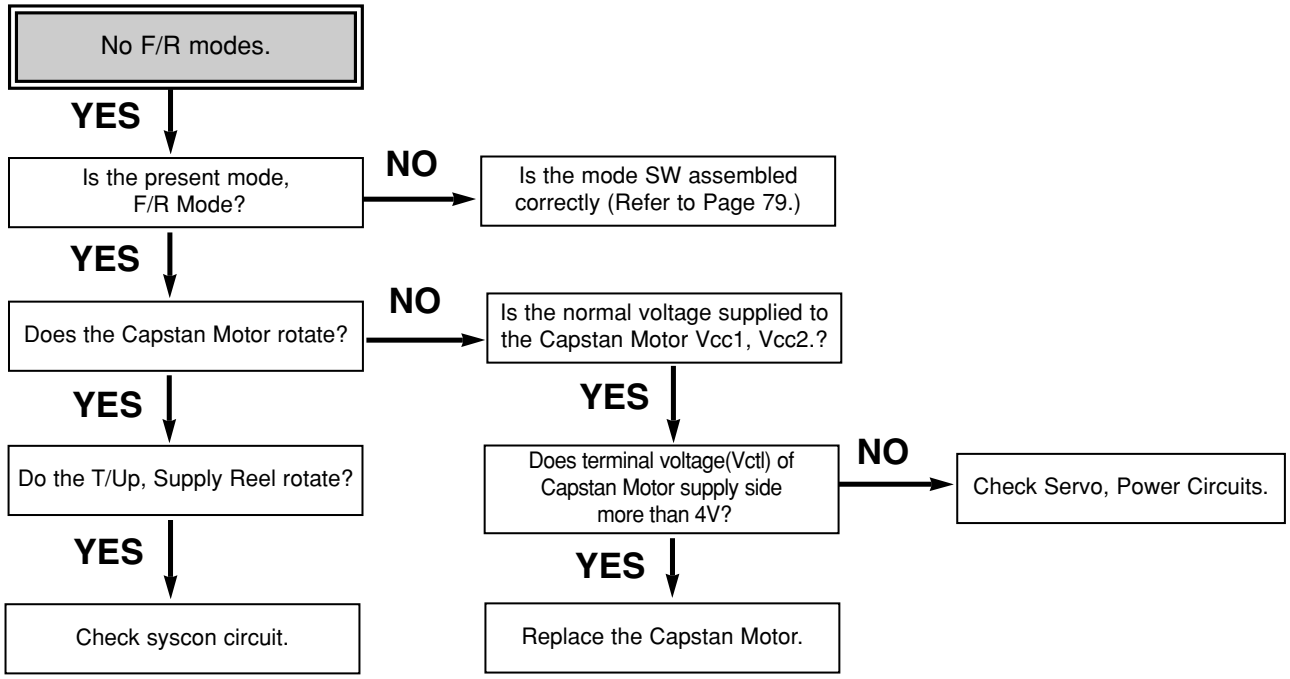

Downloaded from www.Manualslib.com manuals search engine

MECHANISM TROUBLESHOOTING GUIDE

C.

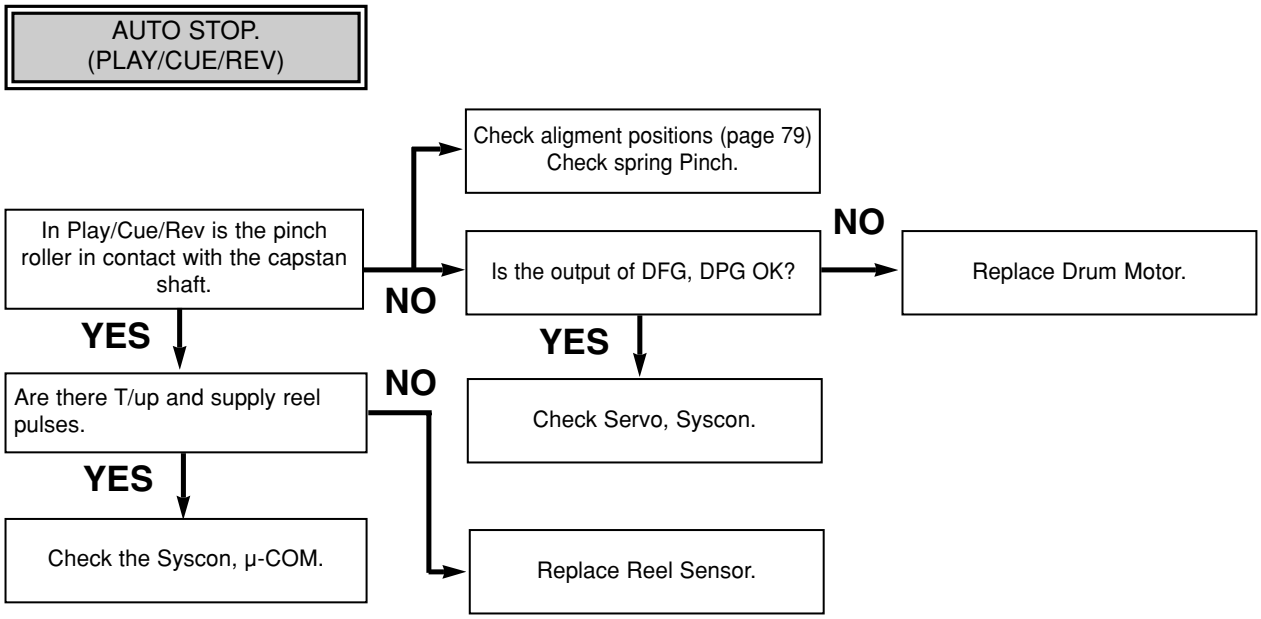

D.

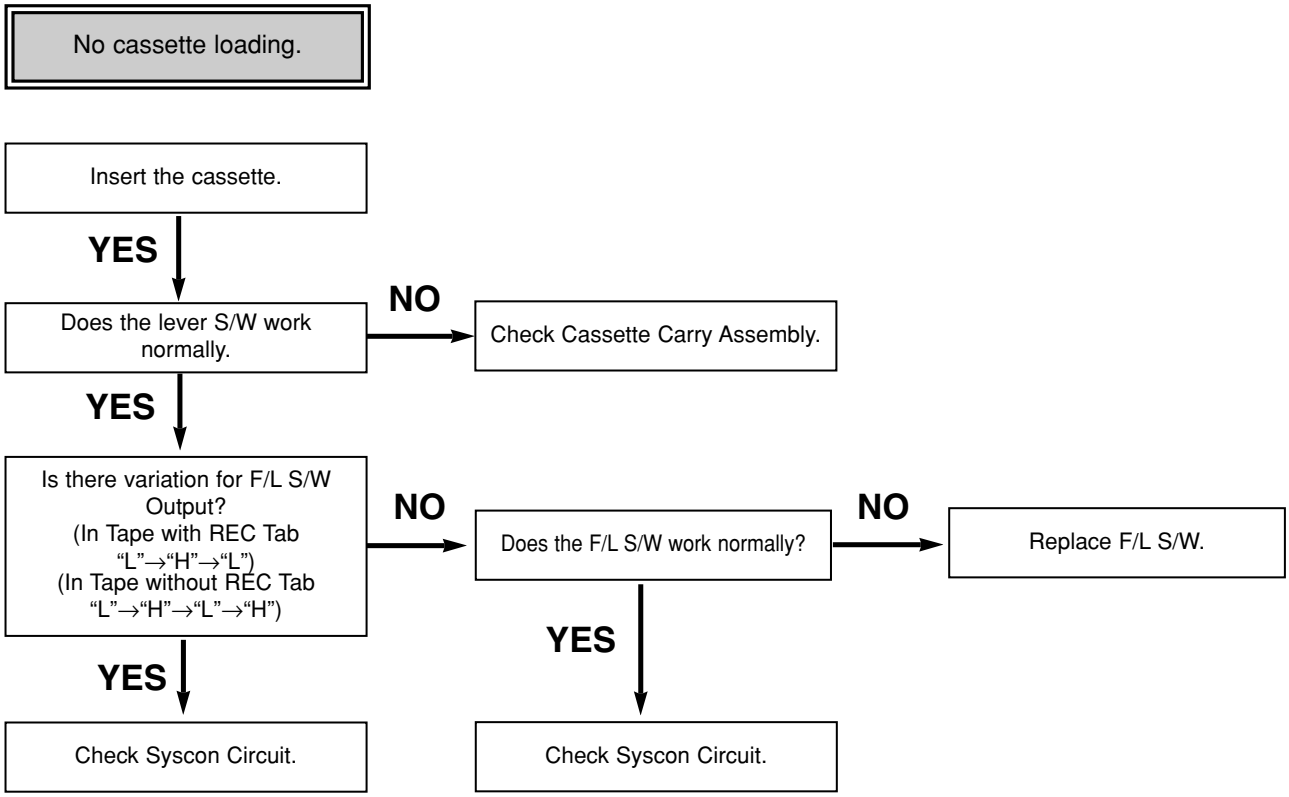

Downloaded from www.Manualslib.com manuals search engine

MECHANISM TROUBLESHOOTING GUIDE

E.

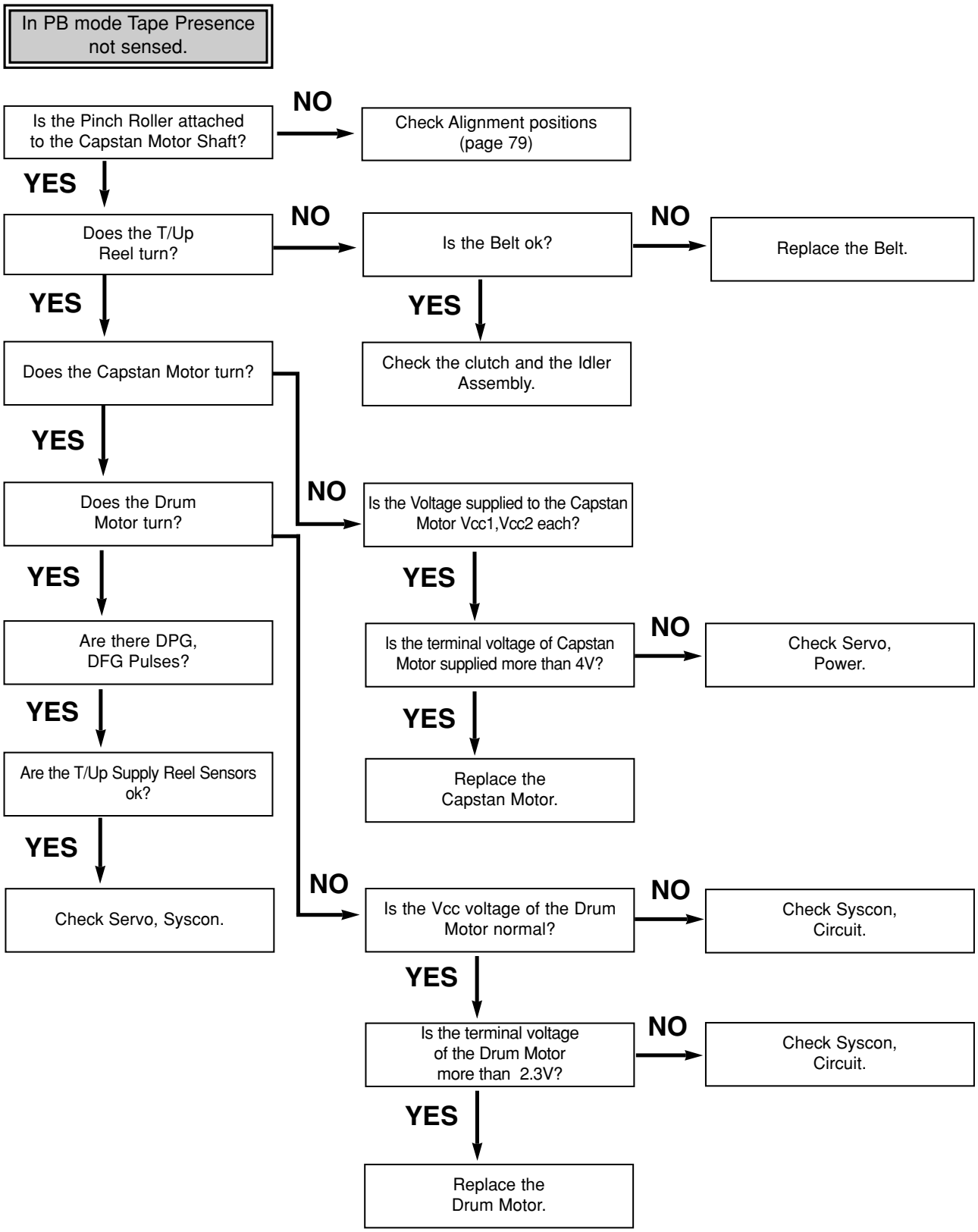

Downloaded from www.Manualslib.com manuals search engine

MECHANISM TROUBLESHOOTING GUIDE

2. Front Loading Mechanism

A.

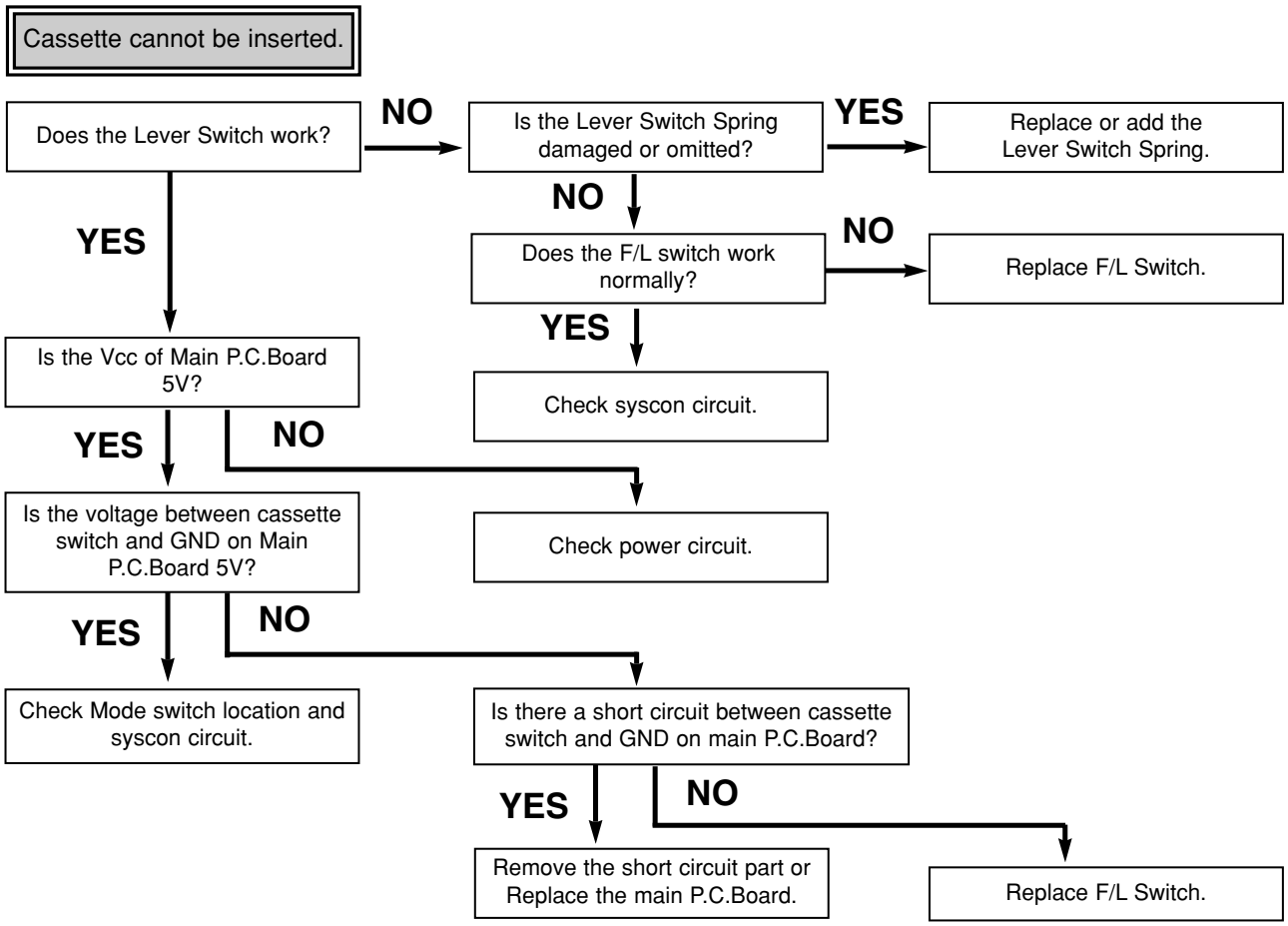

B.

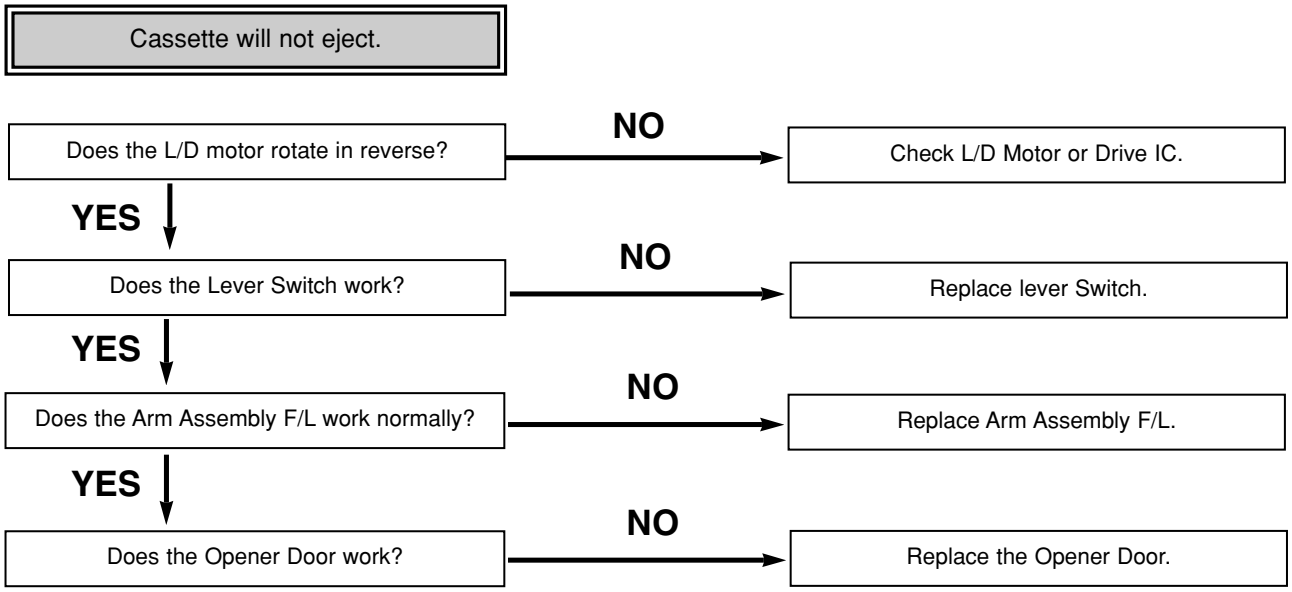

Downloaded from www.Manualslib.com manuals search engine

MECHANISM TROUBLESHOOTING GUIDE

C.

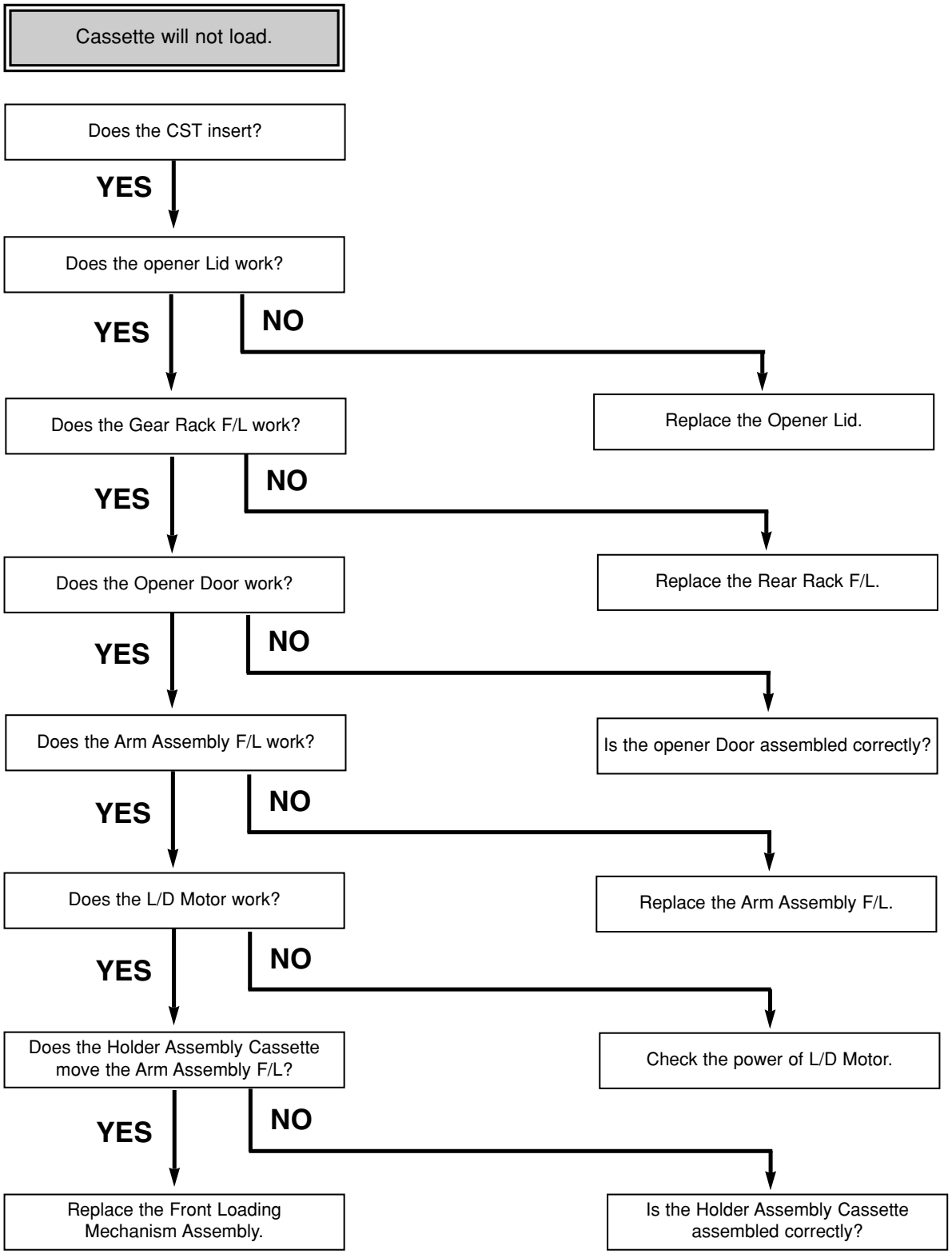

Downloaded from www.Manualslib.com manuals search engine

アイワ株式会社 〒110-8710 東京都台東区池之端1-2-11 ☎03(3827)3111 (代表)
AIWA CO.,LTD. 2-11, IKENOHATA 1-CHOME, TAITO-KU, TOKYO 110-8710, JAPAN TEL:03 (3827) 3111

H251701 Printed in Singapore

Downloaded from www.Manualslib.com manuals search engine